cavagna group

Advanced solutions for gas control

High Pressure Equipment

2015 EDITION

cavagna group

Advanced solutions for gas control

Divisions

LPG REGULATORS

reca ITALY

Kosangas PORTUGAL

zhongshan cavagna CHINA

LPG VALVES AND TANK EQUIPMENT

omeca ITALY

cavagna group asia THAILAND

Kosan INTERNATIONAL ITALY

CONGRIF VENEZUELA

ITALY

cemco kosangas CHILE

cavagna group sudamericana ltda COLOMBIA

HIGH PRESSURE EQUIPMENT

omeca ITALY

pergola ITALY

NATURAL GAS AND METERING DIVISION

reca ITALY

MESURA FRANCE

MESURA TUNISIA

MESURA Nirmal Gas Controls INDIA

ALTERNATIVE FUEL SYSTEMS

omeca ITALY

bigas ITALY

ENGINEERING AND SERVICES

cavimatic ITALY

cavagna group engineering ITALY

Advanced solutions for gas control

TABLE OF CONTENTS

Quality Management and Quality Assurance Conforming to standard ISO 9001 APRAGAZ

We are pleased to announce that APRAGAZ has granted Omeca and Pergola the UNI EN ISO 9001 approval.

This standard has been achieved through the collective efforts of our customers, who have made it possible for us to obtain the goal of "TOTAL QUALITY".

Through our efforts and research we guarantee that Cavagna Group will provide the highest standard of service to ensure success.

Today you can be assured that with Cavagna Group you will have a partner in quality and excellence.

International Standards

Many products of the Group carry the approval of National and International Organizations. For example:

APRAGAZ BELGIUM	CGA CGA	CHLORINE INSTITUTE	CZECH REBUBLIC
AIR LIQUIDE FRANCE	DIN-DVGW GERMANY	BAM GERMANY	POLAND
POLAND	ISCIR ROMANIA		

Please be so kind to verify with us approvals, accessories (tubes, tubes Material components, tubes fixing, anti-filling devices, tools for anti-filling devices, caps, sealants and settings) and optional features. Approvals of any kind have to be expressly specified on orders or enquires.

For orders please refer to:

cavagna group
cavagna north america inc.
50 Napoleon Court Somerset, NJ 08873
732-469-2100 • Fax 732-469-3344
info@cavagna.com - www.cavagnagroup.com

Advanced Solutions for Gas Control

Since 1931 the Cavagna Group has been a premier manufacturer of cylinder valves and related equipment. Recognized around the world, Cavagna meets or exceeds the highest industry and regional standards for quality. This commitment has resulted in the expansion of our growing client base to over 135 countries worldwide.

Headquartered in Brescia Italy, Cavagna is a respected global leader in the forging and machining of brass, zinc, alloys and steel. Originally founded in 1931 under another name, today the group produces an enormous variety of gas products at nine production facilities located in Italy and nine others spread across the five continents.

Years of experience and devotion to highly automated and controlled production facilities enabled the group tomove into many new market segments through its own research and development activities coupled with several key acquisitions.

Today we offer our customers a complete solution for their gas handling needs. Our product offering includes LP gas valves, ASME, fork lift and motor fuel tank valves, medium and high pressure cylinder valves for industrial, medical and specialty gases and a range of high and low pressure LP and natural gas regulators.

Cavagna is recognized by over 40 national and international standards agencies, including such Canadian and U.S. organizations as the AGA, ASME, CGA, IAS and UL. Most recently Cavagna has secured its approval by the European notified body Apragaz for its High Pressure Industrial and Specialty Gas and LP-Gas Cylinder valve line.

The Cavagna Group operates seventeen world wide operations making it one of the world's largest producers of gas valves, regulators and related equipment.

Our North American Distribution Center was opened in 1997, this 21,000 square feet facility located in Somerset New Jersey provides our customer s with immediate on time shipments from our extensive inventories. The group's commitment to local inventory has allowed our sales to both our Canadian and U.S. clients grow as they provide 24 hour order processing.

Our commitment to customer service is paramount to our corporate philosophy of "Think Globally and Act Locally".

We are an aggressive company with a superb safety record. Our various market interests have allowed us to develop a product line unparalleled in our industry.

Growth and service go hand in hand with Cavagna's commitment to total quality. It is this commitment that drove the group's achievement of ISO certification in the early 1990s.
To further our goal in the area of quality and to significantly move ahead of our competition, Cavagna has recently embarked on a six-sigma program to pursue a higher level of overall corporated quality. This program is being supported by our top management and will involve every face of our firm's resources.

Quality and capabilities have certainly paid us dividends over the years. The objective of our R & D group, our quality department and our engineering group are obtained because of Cavagna's corporate philosophy which bases its milestones on the quality of the human resources employed to guarantee the safety and reliability of its products world wide.

We look forward to the privilege to serve your needs in the future.

Valve Numbering Sequence Guide

Part Number	C	B	A	1	540	1	3360B	Blank after pressure setting valve not bagged
Sequence	1	2	3	4	5	6	7	"B" valve bagged for medical oxygen service

1	Manufacturer	C	Cavagna
		P	Pergola
2	Body Material	B	Brass
		C	Chromium Plated Brass
		D	Chromium Plated Brass except inlet
		S	Stainless Steel AISI 303
		T	Stainless Steel AISI 316
		N	Nickel Plated Brass
		Z	Aluminium Silicon Bronze
3	Valve Model	A	Standard
		B	B Acetylene Valve
		C	MC Acetylene Valve
		D	Diaspec Diaphragm Valve
		E	Pin Index Wrench Operated
		F	Pin Index Toggle Operated
		G	Standard Valve With Black Lexan Handwheel
		H	B Acetylene Valve With Handwheel
		I	MC Acetylene Valve With Handwheel
		L	Chlorine Institute Valve
		M	Pin Indexed With Handwheel
		O	90° Acetylene Valve
		P	Pin Index With Toggle And Gauge Port
		V	Residual Pressure Valve Series P 1320
		W	WB Acetylene Valve
4	Inlet Thread Size	0	3/4" NGT-CL1
		1	3/4" NGT
		2	.625-16UNF2A
		3	.750-16UNF2A
		4	3/4" NGT 4 O.S.
		5	3/8" NGT
		6	1" NGT
		7	3/4" NGT 7 O.S.
		8	1/2" NGT
		9	1.125" UNF
5	CGA Outlet Standard	3	CGA Designation, example: 320 540 580 870
6	Safety type	0	Without safety
		1	Safety disc
		2	Fuse 165 f
		3	Fuse 212 f
		4	Supplied without safety disc
		5	Fuse 165 f with safety disc
		6	Fuse 212 f with safety disc
7	Pressure Setting	4	PRD Requirement, example: 3,000 3,360 3,775 4,000 Etc. PSI

Standard carton quantities: Standard A **25** / B Acetylene Series: **40** / MC Acetylene Series: **50** / 800-900 Post Valves: **50**

cavagna group

Advanced solutions for gas control

HIGH PRESSURE EQUIPMENT DIVISION

HIGH PRESSURE CYLINDER VALVES

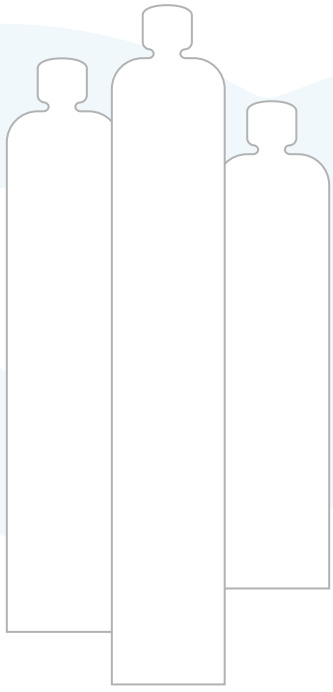

CBA series

Commercial and POL Style Acetylene Cylinder Valves

O-Ring seal type

List Features

- O-Ring technology provides superior leak integrity
- Easy operation and long service life
- 100% leak test to 1.2 times service pressure
- All markings are located on the valve neck to protect them from damage
- Large orifice size provides faster vacuum and filling rates
- Durable forged brass body manufactured by Cavagna Group
- Unique seat holder design
- Available configurations include: Inlet threads (NGT, DIN477, BS, EN, EN ISO)

List Technical data

Pressure		
Maximum Service Pressure	34,5 bar	500 PSI
Test Pressure	60 bar	885 PSI
Temperature - Storage	-50° C ÷ 65° C	-60° F ÷ 149° F
Temperature - Operating	-45° C ÷ 65° C	-50° F ÷ 149° F
Life Cycle	2,000 minimum	
Torque Values for PBA Acetylene valves		
Max Operating torque @ 0 PSIG inlet pressure	1 N/m	8.8 lbs / inch
Max Operating torque @ 240 PSIG inlet pressure	1 N/m	8.8 lbs / inch
Max Operating torque @ 2,900 PSIG inlet pressure	2 N/m	17.7 lbs / inch
Max Overtorque	25 N/m	221 lbs / inch
Flow Capacity (CV)	n/a	
Orifice Ø:	3.5 mm	0.137 inch

Material components

Valve Body	Forged Brass EN12165 alloy
Back up ring	PTFE
Handwheel	Aluminium
Seat	PA 612-Zytel
O-rings	EPDM
Antifriction ring	Delrin
Bonnet	Brass alloy conforming EN12164

Conforms to all requirements of:

CGA V 9	Standard for Gas Cylinder Valves
CGA S-1.1	Standard for Pressure Relief Devices
CGA V-1	Compressed Gas Cylinder Valve Outlet and Inlet Connections
ISO 10297	International Standard
ISO 14246	International Standard

Ordering Information

Part Number	Type	CGA Outlet	Outlet Thread Size	Inlet Thread Size
CBA 8 300 0	Commercial	300	.825"-14 NGO RH Ext.	1/2" NGT
CBA 1 300 0	Commercial	300	.825"-14 NGO RH Ext.	3/4"-14 NGT
CBA 6 300 0	Commercial	300	.825"-14 NGO RH Ext.	1"-11 1/2 NGT
CBA 1 415 0	Canadian Style	415	.850"-14 NGO LH Int.	3/4"-14 NGT
CBA 8 510 0	P.O.L.	510	.885"-14 NGO LH Int.	1/2" NGT
CBA 1 510 0	P.O.L.	510	.885"-14 NGO LH Int.	3/4"-14 NGT
CBA 6 510 0	P.O.L.	510	.885"-14 NGO LH Int.	1"-11 1/2 NGT

CBO series

Vertical Outlet Acetylene Valve with Handwheel

For Collar Style Cylinders

List Features

- Rugged brass forged body manufactured by Cavagna Group
- O-Ring design provides industries best leak tightness and easy operation
- Compact Handwheel provides better access to the valve Handwheel and eliminates interference with cylinder collar
- Inlet screen prevents filler mass or felts from entering the valve
- Easy to read valve markings are roll stamped on the valve neck - not on the wrench flats
- Soft seat design provides positive shut off

List Technical data

Pressure		
Maximum Service Pressure	34,5 bar	500 PSI
Test Pressure	60 bar	885 PSI
Temperature - Storage	-50° C ÷ 65° C	-60° F ÷ 149° F
Temperature - Operating	-45° C ÷ 65° C	-50° F ÷ 149° F
Life Cycle	2,000 minimum	
Torque Values for PBA Acetylene valves		
Max Operating torque @ 0 PSIG inlet pressure	1 N/m	8.8 lbs / inch
Max Operating torque @ 240 PSIG inlet pressure	1 N/m	8.8 lbs / inch
Max Operating torque @ 2,900 PSIG inlet pressure	2 N/m	17.7 lbs / inch
Max Overtorque	25 N/m	221 lbs / inch
Flow Capacity (CV)	n/a	
Orifice Ø:	3.5 mm	0.137 inch

Material components

Valve Body	Forged Brass EN121645
Handwheel	Aluminium
Bonnet	Brass EN12164
Seat	PA 612 Zytel 158
O-Rings	EPDM
Back up Ring	PTFE
Antifriction ring	Delrin
Filter	Stainless Steel

Conforms to all requirements of:

CGA V 9	Standard for Gas Cylinder Valves
CGA S-1.1	Standard for Pressure Relief Devices
CGA V-1	Compressed Gas Cylinder Valve Outlet and Inlet Connections
ISO 10297	International Standard
ISO 14246	International Standard

Ordering Information

Part Number	Type	CGA Outlet	Outlet Thread Size	Inlet Thread Size
CBO 1 510 0	P.O.L.	510	.885"-14 NGO LH Int.	3/4" NGT
CBO 1 300 0	Commercial	300	.825"-14 NGO RH Ext.	3/4" NGT

CBH/CBI series

New Handwheel O-ring Seal B and MC

Acetylene Cylinder Valves

List Features

- Handwheel design permits easy access to the valve stem and bonnet to perform leak checks in compliance with DOT requirements
- Positive spindle nut seal with the valve body eliminates the need for constant tightening of packing nuts
- Robust brass Handwheel prevents breakage and corrosion associated with aluminium versions
- Self locking zinc coated steel nut affixes Handwheel to the Sturdy Brass Stem
- Proven double O-Ring technology assures positive leak tight operation extending service life
- Easy low torque operation eliminates the need for wrenches or keys
- Soft seat extends service life and reduces leakage
- Handwheel design eliminates costly valve repairs reducing overall "Cost of Ownership"

List Technical data

Pressure		
Proof	100 bar min	1,465 PSI min
Test	60 bar	885 PSI
Temperature - Storage	-50° C ÷ 65° C	-60° F ÷ 149° F
Temperature - Operating	-45° C ÷ 65° C	-50° F ÷ 149° F
Life Cycle	2,000 minimum	
Torque Values for PBH/PBI Acetylene valves		
Operating torque @ 500 PSIG	3 lbs/inch (CGA 200)	3 lbs/inch (CGA 520)
Max Overtorque	25 N/m	221 lbs / inch
Orifice Ø:	(200) .133 inch	(520) .133 inch

Material components

Valve Body	Forged Brass EN12165
Handwheel	Brass EN12164
Bonnet Nut	Brass EN12164
Seat	PA 612 Zytel 158
O-Rings	EPDM
Back up Ring	PTFE
Fusible plug	212° F Integral Fusible metal
Strainer	AISI 304 100 mesh

Conforms to all requirements of:

CGA S-1.1	Standard for Pressure Relief Devices
CGA V-1	Compressed Gas Cylinder Valve Outlet and Inlet Connections
CGAV9	Standard for Gas Cylinder valves

Ordering Information

Part Number	Gas Service	CGA Outlet	Outlet Thread Size	Inlet Thread Size
CBH 5 520 3	Acetylene	520	.895-18 NGO RH Ext.	3/8-18 NGT
CBI 5 200 3	Acetylene	200	.625-20 NGO RH Ext.	3/8-18 NGT

CBB/CBC series

Wrench Operated Acetylene Valves

List Features

- Valve body made of rugged forged brass produced by Cavagna Group
- Fusible metal pressure relief device
- Large wrench flats for easy installation
- Teflon packing and anti extrusion rings prevent packing leakage
- Plated steel stem resists damage from wrenches and corrosion

List Technical data

Pressure		
Proof	100 bar min	1,465 PSI min
Test	60 bar	885 PSI
Temperature - Storage	-50° C ÷ 65° C	-60° F ÷ 149° F
Temperature - Operating	-45° C ÷ 65° C	-50° F ÷ 149° F
Life Cycle	2,000 minimum	

Torque Values for PBB/PBC Acetylene valves:
See Ordering information below.

Material components

Valve Body	Forged Brass EN12165 alloy
Pressure Relief	212° F Integral Fusible Metal
Packing Nut	Brass EN12164
Packing	Teflon (PTFE)
Packing Gland	Brass EN12164 alloy
Packing Washer	Brass EN12165 alloy
Stem	Steel UNI4838
Strainer	AISI 304 100 mesh

Conforms to all requirements of:

CGA V 9	Standard for Gas Cylinder Valves
CGA S-1.1	Standard for Pressure Relief Devices
CGA V-1	Compressed Gas Cylinder Valve Outlet and Inlet Connections

Ordering Information

Part Number	Gas Service	CGA Outlet	Outlet Thread Size	Inlet Thread Size
CBB 5 520 3	Acetylene	520	.895-18 NGO RH Ext.	3/8-18 NGT
CBC 5 200 3	Acetylene	200	.625-20 NGO RH Ext.	3/8-18 NGT

Torque Values

Description	Torque
Operating Torque @ 0 psig Inlet Pressure	6 - 10 in lbs
Closing Torque @ 500 psig Inlet Pressure	6 - 10 in lbs
Packing Nut Installation Torque	80 - 100 in lbs
Stem Installation Torque	45 ± 5 in lbs

Flow Data

CGA Outlet Number	200	520
Orifice Ø: Diameter (inches)	.133	.133
Flow Constant: Cv - Full Open	n/a	n/a
Flow CFM @ 240 PSIG Inlet	n/a	n/a

CBA series

Brass High Pressure Cylinder Valve for Industrial Gases

O-Ring seal type

List Features

- O-Ring technology provides superior leak integrity
- Easy operation under high pressure
- 100% leak test to 1.2 times cylinder service pressure
- All markings are located on the valve neck to protect them from damage
- Large Orifice Ø: provides faster vacuum and filling rates
- Available bursting discs for all DOT cylinders
- Durable forged brass body manufactured by Cavagna Group
- Passes stringent oxygen adiabatic compression test
- Unique seat holder design
- Standard pressure relief device thread - .650-19UNS-2B
- Color coded safety device for easy burst disc identification
- Available configurations include:
  Inlet threads (NGT, UNF, DIN477, BS, EN, EN ISO)
  All CGA outlets available
- Available with inlet thread for DT
- Unitized "plug style" pressure relief device

List Technical data

Pressure		
Maximum Service Pressure	276 bar	4,000 PSI
Temperature - Storage	-50° C ÷ 65° C	-60° F ÷ 149° F
Temperature - Operating	-45° C ÷ 65° C	-50° F ÷ 149° F
Life Cycle	2,000 minimum	
Torque Values for PBA Acetylene valves		
Max Operating torque @ 0 PSIG inlet pressure	1 N/m	8.8 lbs / inch
Max Operating torque @ 240 PSIG inlet pressure	1 N/m	8.8 lbs / inch
Max Operating torque @ 2900 PSIG inlet pressure	2 N/m	17.7 lbs / inch
Max Overtorque	25 N/m	221 lbs / inch
Flow Capacity CV / Full open	n/a	
Orifice Ø:	4 mm	.160 inch

Material components

Valve Body	Forged Brass EN12165 alloy
Bursting disc	Nickel alloy or Stainless Steel
Bursting disc body	Brass (also available with 212°F fusible metal)
Back up Ring	Nylon or PTFE
Bonnet	Brass
Handwheel	Aluminium
Seat	Polyamide
O-rings	EPDM
Antifriction	Delrin
Stem	Brass according to EN 12164 alloy

Conforms to all requirements of:

CGA V 9	Standard for Gas Cylinder Valves
CGA S-1.1	Standard for Pressure Relief Devices
CGA V-1	Compressed Gas Cylinder Valve Outlet and Inlet Connections
ISO 10297	International Standard
ISO 14246	International Standard

CBA series

Brass High Pressure Cylinder Valve for Industrial Gases

O-Ring seal type

Ordering Information

Part Number	Gas Service	CGA Outlet	Outlet Thread Size	Inlet Thread Size
	Hydrogen			
CBA 8 350 6 xxxx	0 to 3,000 psi	350	.825-14 NGO LH Ext.	1/2"-14 NGT
CBA 1 350 6 xxxx				3/4"-14 NGT
CBA 6 350 6 xxxx				1-11 1/2 NGT
CBA 3 350 6 xxxx				.750"-16 UNF
CBA 9 350 6 xxxx				1.125" -12 UNF
CBA 1 695 6 xxxx	3,000 to 5,500 psi	695	1.045-14 NGO RH Int.	3/4"-14 NGT
CBA 1 703 6 xxxx	5,500 to 7,500 psi	703	1.125-14 NGO LH Int.	3/4"-14 NGT
	Krypton			
CBA 8 580 1 xxxx	0 to 3,000 psi	580	.965-14 NGO RH Int.	1/2"-14 NGT
CBA 1 580 1 xxxx				3/4"-14 NGT
CBA 6 580 1 xxxx				1-11 1/2 NGT
CBA 3 580 1 xxxx				.750"-16 UNF
CBG 9 580 1 xxxx				1.125" -12 UNF
CBA 1 680 1 xxxx	3,000 to 5,500 psi	680	1.045-14 NGO RH Int.	3/4"-14 NGT
CBA 1 677 1 xxxx	5,500 to 7,500 psi	677	1.030-14 NGO LH Ext.	3/4"-14 NGT
	Methane (R50)			
CBA 8 350 6 xxxx	0 to 3,000 psi	350	.825-14 NGO LH Ext.	1/2"-14 NGT
CBA 1 350 6 xxxx				3/4"-14 NGT
CBA 6 350 6 xxxx				1-11 1/2 NGT
CBA 3 350 6 xxxx				.750"-16 UNF
CBA 9 350 6 xxxx				1.125" -12 UNF
CBA 1 695 6 xxxx	3,000 to 5,500 psi	695	1.045-14 NGO RH Int.	3/4"-14 NGT
CBA 1 703 6 xxxx	5,500 to 7,500 psi	703	1.125-14 NGO LH Int.	3/4"-14 NGT
	Natural Gas			
CBA 8 350 6 xxxx	0 to 3,000 psi	350	.825-14 NGO LH Ext.	1/2"-14 NGT
CBA 1 350 6 xxxx				3/4"-14 NGT
CBA 6 350 6 xxxx				1-11 1/2 NGT
CBA 3 350 6 xxxx				.750"-16 UNF
CBA 9 350 6 xxxx				1.125" -12 UNF
CBA 1 695 6 xxxx	3,000 to 5,500 psi	695	1.045-14 NGO RH Int.	3/4"-14 NGT
CBA 1 703 6 xxxx	5,500 to 7,500 psi	703	1.125-14 NGO LH Int.	3/4"-14 NGT
	Neon			
CBA 8 580 1 xxxx	0 to 3,000 psi	580	.965-14 NGO RH Int.	1/2"-14 NGT
CBA 1 580 1 xxxx				3/4"-14 NGT
CBA 6 580 1 xxxx				1-11 1/2 NGT
CBA 3 580 1 xxxx				.750"-16 UNF
CBA 9 580 1 xxxx				1.125" -12 UNF
CBA 1 680 1 xxxx	3,000 to 5,500 psi	680	1.045-14 NGO RH Int.	3/4"-14 NGT
CBA 1 677 1 xxxx	5,500 to 7,500 psi	677	1.030-14 NGO LH Ext.	3/4"-14 NGT
	Nitrogen			
CBA 580 1 xxxx	0 to 3,000 psi	580	.965-14 NGO RH Int.	1/2"-14 NGT
CBA 1 580 1 xxxx				3/4"-14 NGT
CBA 6 580 1 xxxx				1-11 1/2 NGT
CBA 3 580 1 xxxx				.750"-16 UNF
CBA 9 580 1 xxxx				1.125" -12 UNF
CBA 1 680 1 xxxx	3,000 to 5,500 psi	680	1.045-14 NGO RH Int.	3/4"-14 NGT
CBA 1 677 1 xxxx	5,500 to 7,500 psi	677	1.030-14 NGO LH Ext.	3/4"-14 NGT
	Air (R729)			
CBA 8 346 1 xxxx	0 psi to 3,000 psi	346	.825"- 14 NGO RH Ext.	1/2"-14 NGT
CBA 1 346 1 xxxx				3/4"-14 NGT
CBA 6 346 1 xxxx				1-11 1/2 NGT
CBA 3 346 1 xxxx				.750"-16 UNF
CBA 9 346 1 xxxx				1.125" -12 UNF
CBA 1 347 1 xxxx	3,000 to 5,500 psi	347	.825-14 NGO RH Ext.	3/4"-14 NGT
CBA 1 702 1 xxxx	5,500 to 7,500 psi	702	1.125"-14 NGO RH Ext.	3/4"-14 NGT
	Argon			
CBA 8 580 1 xxxx	0 to 3,000 psi	580	.965-14 NGO RH Int.	1/2"-14 NGT
CBA 1 580 1 xxxx				3/4"-14 NGT
CBA 6 580 1 xxxx				1-11 1/2 NGT
CBA 3 580 1 xxxx				.750"-16 UNF
CBA 9 580 1 xxxx				1.125" -12 UNF
CBA 1 680 1 xxxx	3,000 to 5,500 psi	680	1.045-14 NGO RH Int.	3/4"-14 NGT
CBA 1 677 1 xxxx	5,500 to 7,500 psi	677	1.030-14 NGO LH Ext.	3/4"-14 NGT
	Butane/Propane			
CBA 8 555 1 xxxx	Liquid Withdrawal	555	.903-14 NGO LH Ext.	1/2"-14 NGT
CBA 1 555 1 xxxx				3/4"-14 NGT
CBA 6 555 1 xxxx				1-11 1/2 NGT
CBA 3 555 1 xxxx				.750"-16 UNF
CBA 9 555 1 xxxx				1.125" -12 UNF
CBA 8 320 1 xxxx	**Carbon Dioxide**	320	.825-14 NGO RH Ext.	1/2"-14 NGT
CBA 1 320 1 xxxx	(R744)			3/4"-14 NGT
CBA 6 320 1 xxxx				1-11 1/2 NGT
CBA 3 320 1 xxxx				.750"-16 UNF
CBG 9 320 1 xxxx				1.125" -12 UNF

CBA series
Brass High Pressure Cylinder Valves
for Industrial Gases

Ordering Information

Part Number	Gas Service	CGA Outlet	Outlet Thread Size	Inlet Thread Size
	Carbon Monoxide			
CBA 8 350 6 xxxx	0 to 3,000 psi	350	.825-14 NGO LH Ext.	1/2"-14 NGT
CBA 1 350 6 xxxx				3/4"-14 NGT
CBA 6 350 6 xxxx				1-11 1/2 NGT
CBA 3 350 6 xxxx				.750"-16 UNF
CBA 9 350 6 xxxx				1.125" -12 UNF
CBA 1 695 6 xxxx	3,000 to 5,500 psi	695	1.045-14 NGO LH Int.	3/4"-14 NGT
CBA 1 703 6 xxxx	5,500 to 7,500 psi	703	1.125-14 NGO LH Int.	3/4"-14 NGT
CBA 8 660	**1,2 Dichloroethylene**	660	1.030-14 NGO RH Ext.	1/2"-14 NGT
CBA 1 660	(R1130)		(Face Washer Seal)	3/4"-14 NGT
CBA 6 660				1-11 1/2 NGT
CBA 3 660				.750"-16 UNF
CBA 9 660				1.125" -12 UNF
CBA 8 580 1 xxxx	**Helium**	580	.965-14 NGO RH Int.	1/2"-14 NGT
CBA 1 580 1 xxxx	0 to 3,000 psi			3/4"-14 NGT
CBA 6 580 1 xxxx				1-11 1/2 NGT
CBA 3 580 1 xxxx				.750"-16 UNF
CBG 9 580 1 xxxx				1.125" -12 UNF
CBA 1 680 1 xxxx	3,000 to 5,500 psi	680	1.045-14 NGO RH Int.	3/4"-14 NGT
CBA 1 677 1 xxxx	5,500 to 7,500 psi	677	1.030-14 NGO LH Ext.	3/4"-14 NGT
CBA 8 326 1 xxxx	**Nitrous Oxide**	326	.825-14 NGO RH Ext.	1/2"-14 NGT
CBA 1 326 1 xxxx	(R744a)			3/4"-14 NGT
CBA 6 326 1 xxxx				1-11 1/2 NGT
CBA 3 326 1 xxxx				.750"-16 UNF
CBA 9 326 1 xxxx				1.125" -12 UNF
	Oxygen			
CBA 8 540 1 xxxx	0 to 3,000 psi	540	.903-14 NGO RH Ext.	1/2"-14 NGT
CBA 1 540 1 xxxx				3/4"-14 NGT
CBA 6 540 1 xxxx				1-11 1/2 NGT
CBA 3 540 1 xxxx				.750"-16 UNF
CBA 9 540 1 xxxx				1.125" -12 UNF
CBA 1 577 1 xxxx	3,000 to 4,000 psi	577	.960-14 NGO RH Ext.	3/4"-14 NGT
CBA 1 701 1 xxxx	4,000 to 5,500 psi	701	1.103-14 NGO RH Ext.	3/4"-14 NGT
CBA 8 660 1 xxxx	**Sulfur Dioxide**	660	1.030-14 NGO RH Int.	1/2"-14 NGT
CBA 1 660 1 xxxx				3/4"-14 NGT
CBA 6 660 1 xxxx				1-11 1/2 NGT
CBA 3 660 1 xxxx				.750"-16 UNF
CBA 9 660 1 xxxx				1.125" -12 UNF
	Xenon			
CBA 8 580 1 xxxx	0 to 3,000 psi	580	.965-14 NGO RH Int.	1/2"-14 NGT
CBA 1 580 1 xxxx				3/4"-14 NGT
CBA 6 580 1 xxxx				1-11 1/2 NGT
CBA 3 580 1 xxxx				.750"-16 UNF
CBA 9 580 1 xxxx				1.125" -12 UNF
CBA 1 680 1 xxxx	3,000 to 5,500 psi	680	1.045-14 NGO RH Int.	3/4"-14 NGT
CBA 1 677 1 xxxx	5,500 to 7,500 psi	677	1.030-14 NGO LH Ext.	3/4"-14 NGT

xxxx Denotes Pressure Relief Device burst disc rupture pressure.

Available with:
4 and 7 thread oversize inlets: To order change the first number "1" in the part number to "4" or "7"

example: CBA 1 320 1 xxxx becomes CBA 4 320 1 xxxx

Chromium plating: To order, change the letter "B" in the part number to letter "D"
example: CBA 1 540 1 xxxx becomes CDA 1 540 1 xxxx

Fusible backed pressure relief devices in 165° F and 212° F nominal melting temperatures:
To order, change the eigth position in the part number to "5" for 165° F and "6" for 212° F
example: CBA 1350 1 xxxx becomes CBA 1 350 5 xxxx for 165° F or CBA 1 350 6 xxxx for 212° F

P 2009 series
Residual High Pressure Cylinder Valves
for Industrial Gases

List Features
- Residual pressure valve, o-ring seal type for various gases including CO2
- Filling connector available separately

List Technical data

Pressure		
Maximum Service Pressure	230 bar	3,336 PSI
Test	276 bar	4,000 PSI
Temperature Range	-40°C ÷ +65°C	-40°F ÷ +149°F
Life Cycle	2,000 minimum	
Guaranteed External Tightness	leakage ≤ 6 cm^3/h	0.788 scfm
Guaranteed Internal Tightness	leakage ≤ 6 cm^3/h	0.788 scfm
Residual pressure device	2.5 to 4 bar	35 to 58 PSI
	(according to customer's specifications)	

Material components

Handwheel	Aluminium
Valve Body	Brass alloy according to EN12165
O-ring	EPDM
Seat pad	Polyamide
Bursting disc	Nickel alloy or Stainless Steel
Spring	Stainless steel or copper beryllium
Seal	Plastic
Bursting disc body	Brass
Spindle	Brass
Spring retainer	Brass

FILLING ADAPTOR

Options
Customized Handwheel logo cap
Dip tube
Bursting disc safety available in various settings
Chromium plating
Plastic Handwheel
Filter
Parallel thread
Thread for dip tube installation

Conforms to all requirements of:

CGA V 9	Standard for Gas Cylinder Valves
CGA S-1.1	Standard for Pressure Relief Devices
CGA V-1	Compressed Gas Cylinder Valve Outlet and Inlet Connections
ISO 10297	International Standard
ISO 14246	International Standard
ISO 15996	International Standard

P 1020 series
Residual High Pressure Cylinder Valves
for Industrial Gases

List Features
- Residual pressure valve, o-ring seal type for various gases including CO2
- Filling connector available separately

List Technical data

Pressure		
Maximum Service Pressure	230 bar	3,336 PSI
Test	276 bar	4,000 PSI
Temperature Range	-40°C ÷ +65°C	-40°F ÷ +149°F
Life Cycle	2,000 minimum	
Guaranteed External Tightness	leakage ≤ 6 cm³/h	0.788 scfm
Guaranteed Internal Tightness	leakage ≤ 6 cm³/h	0.788 scfm
Residual pressure device	2.5 to 4 bar	35 to 58 PSI
	(according to customer's specifications)	

Material components

Handwheel	Aluminium
Valve Body	Brass alloy according to EN12165
O-ring	EPDM
Seat pad	Polyamide
Bursting disc	Nickel alloy or Stainless Steel
Spring	Stainless steel or copper beryllium
Seal	Plastic
Bursting disc body	Brass
Spindle	Brass
Spring retainer	Brass

FILLING ADAPTOR

Options
Customized Handwheel logo cap
Dip tube
Bursting disc safety available in various settings
Chromium plating
Plastic Handwheel
Filter
Parallel thread
Thread for dip tube installation

Conforms to all requirements of:

CGA V 9	Standard for Gas Cylinder Valves
CGA S-1.1	Standard for Pressure Relief Devices
CGA V-1	Compressed Gas Cylinder Valve Outlet and Inlet Connections
ISO 10297	International Standard
ISO 14246	International Standard
ISO 15996	International Standard

FILLING CONNECTORS

for Residual Pressure valves

List Features

• Are available in brass, in accordance with all international standardized cylinder valves outlets such as DIN - NF - NEN - BS - CGA, as per customer specification.
• The connectors can be used with all the different types of residual pressure valves:

- P1320 series
- P1320 Plus series
- P2009 series
- P1020 series

• The design with a special retractile pin is also available, to allow the connectors to be used with the standard valves series.

Options

Aluminium Handwheel
Chromium plating

IVIPR series
Valve with Integrated Pressure Regulator
for Oxygen

List Features
- Residual pressure valve with integrated Pressure Regulator
- Ergonomically designed with a compact, user friendly casing
- All of the user's primary functions are visible and accessible from one side without turning the cylinder
- Suitable for Oxygen
- Meets all the requirements of ISO 22435, EN-ISO 15996

List Technical data

Pressure		
Maximum Service Pressure	230 or 300 bar	3,336 or 4,350 PSI
Test	276 bar	4,000 PSI
Outlet pressure	adjustable 0 to 145 PSI	
Temperature Range	-40°C ÷ +65°C	-40°F ÷ +149°F
Life Cycle	2,000 minimum	
Guaranteed External Tightness	leakage ≤ 6 cm^3/h	0.788 scfm
Guaranteed Internal Tightness	leakage ≤ 6 cm^3/h	0.788 scfm
Residual pressure range	2.5 to 4 bar	35 to 58 PSI
	(according to customer's specifications)	
Flow Rate	Q1 30 m^3/h	

Material components

Handwheel	Aluminium
Valve Body	Brass alloy according to EN12165
O-ring	EPDM
Main shut off seat pad	PA66
Spring	Stainless steel AISI 302
Sealing cap	Acetal resin
Spring regulator	Cu Be, AISI
Filter	Sintered Bronze
Diaphragms pressure reducer seat	HYTREL 5526
Toroidal ring	EPDM

Options
Customized Handwheel logo cap
Threaded connection and quick connection available according to EN 561

IVIPR series

Valve with Integrated Pressure Regulator

for Ar/CO2 Mix and Inert Gases Mix

List Features

- Residual pressure valve with integrated Pressure Regulator
- Ergonomically designed with a compact, user friendly casing
- All of the user's primary functions are visible and accessible from one side without turning the cylinder
- Suitable for Ar/CO2 mix and Inert Gases Mix
- Meets all the requirements of ISO 22435, EN-ISO 15996

List Technical data

Pressure		
Maximum Service Pressure	230 or 300 bar	3,336 or 4,350 PSI
Test	276	4,000 PSI
Temperature Range	-40°C ÷ +65°C	-40°F ÷ +149°F
Life Cycle	2,000 minimum	
Guaranteed External Tightness	leakage ≤ 6 cm^3/h	0.788 scfm
Guaranteed Internal Tightness	leakage ≤ 6 cm^3/h	0.788 scfm
Residual pressure range	2.5 to 4 bar	35 to 58 PSI
	(according to customer's specifications)	
Flow rate:	Q1 0-40 L/min	

Material components

Handwheel	Aluminium
Valve Body	Brass alloy according to EN12165
O-ring	EPDM
Main shut off seat pad	PA66
Spring	Stainless steel AISI 302
Sealing cap	Acetal resin
Spring regulator	Cu Be, AISI
Filter	Sintered Bronze
Diaphragms pressure reducer seat	HYTREL 5526
Toroidal ring	EPDM

Options

Customized Handwheel logo cap
Threaded connection and quick connection available according to EN 561

IVIPR series

Valve with Integrated Pressure Regulator

for Acetylene

List Features

- Valve with integrated Pressure Regulator
- Ergonomically designed with a compact, user friendly casing
- All of the user's primary functions are visible and accessible from one side without turning the cylinder
- Suitable for Acetylene
- Meets all the requirements of ISO 22435 (except acetylene decomposition test)

List Technical data

Pressure		
Maximum Service Pressure	25 bar	360 PSI
Test	30 bar	435 PSI
Outlet Pressure	adjustable 0 to 17.4 PSI	
Temperature Range	-40°C ÷ +65°C	-40°F ÷ +149°F
Life Cycle	2,000 minimum	
Guaranteed External Tightness	leakage ≤ 6 cm^3/h	0.788 scfm
Guaranteed Internal Tightness	leakage ≤ 6 cm^3/h	0.788 scfm
Flow rate:	Q1 1 m^3/h	

Material components

Handwheel	Aluminium
Valve Body	Brass alloy according to EN12165
O-ring	EPDM
Main shut off seat pad	PEEK
Spring	Stainless steel AISI 302
Sealing cap	Acetal resin
Spring regulator	AISI
Filter	Sintered Bronze
Diaphragms pressure reducer seat	HYTREL 5526
Toroidal Ring	EPDM

Options

Customized Handwheel logo cap
Threaded connection and quick connection available according to EN 561

NOS series
Chromium Plated Brass High Pressure Cylinder Valves
for Nitrogen Dioxide - O-Ring seal type

List Features
- O-Ring technology provides superior leak integrity
- Easy operation under high pressure
- 100% leak test to 1.2 times cylinder service pressure
- Available bursting discs for all DOT cylinders
- Different inlet threads available upon request

List Technical data

Pressure

Maximum Service Pressure	124 bar	1,800 PSI
Test	149 bar	2,161 PSI
Temperature - Storage	-50° C ÷ 65° C	-60° F ÷ 149° F
Temperature - Operating	-45° C ÷ 65° C	-50° F ÷ 149° F
Life Cycle	2,000 minimum	
Max Overtorque	9 N/m	79 lbs / inch
Flow Capacity CV / Full open	n/a	
Orifice Ø:	6 mm	.260"

Material components

Valve Body	Brass according to EN12164 alloy
Bursting disc	Nickel alloy
Bursting disc body	Brass
Back up Ring	PTFE
Bonnet	Brass
Handwheel	Plastic
Seat	Polyamide
O-rings	EPDM
Stem	Brass according to EN 12164 alloy

Conforms to all requirements of:

CGA V 9	Standard for Gas Cylinder Valves
CGA S-1.1	Standard for Pressure Relief Devices
CGA V-1	Compressed Gas Cylinder Valve Outlet and Inlet Connections

Ordering Information

Part Number	Gas Service	Outlet Thread Size	Inlet Thread Size
CCS300013000	Nitrous Dioxide	1/4-27 NPT	.625-18 UNF 2A
			.750-16 UNF 2A

NOS series
Chromium Plated Brass High Pressure Cylinder Valves
for Nitrogen Dioxide - O-Ring seal type

List Features
- O-Ring technology provides superior leak integrity
- Easy operation under high pressure
- 100% leak test to 1.2 times cylinder service pressure
- All marking on the valve neck, protects against damage
- Large Orifice Ø: provides faster vacuum and filling rates
- Gauge port available
- Bursting discs available for all DOT cylinders
- Available configurations include:
  Inlet threads (NGT, UNF, DIN477, BS, EN, EN ISO)

List Technical data

Pressure		
Maximum Service Pressure	207 bar	3,000 PSI
Test	249 bar	3,597 PSI
Temperature - Storage	-50° C ÷ 65° C	-60° F ÷ 149° F
Temperature - Operating	-45° C ÷ 65° C	-50° F ÷ 149° F
Life Cycle	2,000 minimum	
Max Overtorque	25 N/m	221 lbs / inch
Flow Capacity CV / Full open	n/a	
Orifice Ø:	8 mm	.315”

Material components

Valve Body	Forged Brass according to EN12165 alloy
Bursting disc	Nickel alloy
Bursting disc body	Brass (also available with 212°F fusible metal)
Back up Ring	Polyamide
Bonnet	Brass
Handwheel	Aluminium
Seat	Polyamide
O-rings	EPDM
Antifriction	Polyamide
Stem	Brass according to EN 12164 alloy

Conforms to all requirements of:

CGA V 9	Standard for Gas Cylinder Valves
CGA S-1.1	Standard for Pressure Relief Devices
CGA V-1	Compressed Gas Cylinder Valve Outlet and Inlet Connections

Ordering Information

Part Number	Gas Service	Outlet Thread Size	Inlet Thread Size
VOA9APA001	Nitrous Dioxide	CGA 660	1.125-12 UNF 2A

cavagna group

Advanced solutions for gas control

HIGH PRESSURE EQUIPMENT DIVISION

CORROSIVE, PURE AND ULTRAPURE GASES

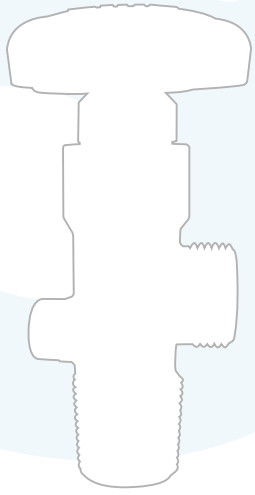

DIASPEC B200 series

Brass High Pressure Diaphragm Seal Valve

for High Purity Gases

List Features

- Low operating torque guaranteed due to soft sealing
- Valve seat secured against extrusion
- Extreme leak tightness achieved by diaphragm sealing
- High Flow Capacity to allow a fast filling and vacuum
- Clean room assembly
- 100% helium leak test
- All markings on the valve neck protected against damage
- Durable forged brass bodies manufactured by Cavagna Group
- All inlets and outlets standards available

DIASPEC B200
Diaphragm Valves for Specialty Gases Applications

List Technical data

Pressure		
Maximum Service Pressure	230 bar	3,336 PSI
Test	276 bar	4,000 PSI
Temperature - Storage	-40°C ÷ +65°C	-40°F ÷ +149°F
Temperature - Operating	-40°C ÷ +65°C	-40°F ÷ +149°F
Life Cycle	2,000 minimum	
Helium leak rate	Internal External Safety	10E-7 atm cc/s 10E-7 atm cc/s 10E-8 atm cc/s
Flow coefficient CV	0.4	
Seat orifice dimension	4 mm	

Material components

Body Material:	Brass
Diaphragm:	Stainless steel Hastelloy
Spindle:	Brass
Seat Disc:	PA 6,6 PCTFE
Bursting Disc:	Nickel AISI 316 L

Options

Chrome or Nickel plated treatment
Different diptube connections available
Customized Handwheel logocap
Various bursting disc settings available
Cleaned for UHP/ECD applications
Prepared for flow restrictor attachment

Conforms to all requirements of:

CGA V 9	Standard for Gas Cylinder Valves
CGA S-1.1	Standard for Pressure Relief Devices
CGA V-1	Compressed Gas Cylinder Valve Outlet and Inlet Connections
ISO 10297	International Standard
ISO 14246	International Standard

Ordering information

V= valve
D= diaphragm
A1= brass body
Seat disc: PCTFE
Diaphragm: Stainless steel
Hastelloy
N= Family

Gas Identification

Progressive number: to identify customer personalization, different inlet and outlet threads, bursting disc setting pressure.

Example: VDA1NOS001

DIASPEC S200 series

Stainless Steel High Pressure Diaphragm Seal Valve

for High Purity Gases

List Features

- Low operating torque guaranteed due to soft sealing
- Valve seat secured against extrusion
- Extreme leak tightness achieved by diaphragm sealing
- High Flow Capacity to allow a fast filling and vacuum
- Clean room assembly
- 100% helium leak test
- All markings on the valve neck protected against damage
- All inlets and outlets standards available

List Technical data

Pressure		
Maximum Service Pressure	200 bar	2,900 PSI
Test	240 bar	3,480 PSI
Temperature - Storage	-40°C ÷ +65°C	-40°F ÷ +149°F
Temperature - Operating	-40°C ÷ +65°C	-40°F ÷ +149°F
Life Cycle	2,000 minimum	
Helium leak rate	Internal	10E-7 atm cc/s
	External	10E-7 atm cc/s
	Safety	10E-8 atm cc/s
Flow coefficient CV	0.4	
Seat orifice dimension	4 mm	

DIASPEC S200
Diaphragm Valves for Specialty Gases Applications

Material components

Body Material:	AISI 316 L
Diaphragm:	Hastelloy Stainless Steel
Spindle:	AISI 316 L
Seat Disc:	PA 6,6 PCTFE
Bursting disc:	Nickel AISI 316 L

Options

Different diptube threads connections available
Customized Handwheel logocap
Various bursting disc settings available
All components in contact with the gas are electrochemically polished.
Cleaned for UHP/ECD applications
Prepared for flow restrictor attachment

Conforms to all requirements of:

CGA V 9	Standard for Gas Cylinder Valves
CGA S-1.1	Standard for Pressure Relief Devices
CGA V-1	Compressed Gas Cylinder Valve Outlet and Inlet Connections
ISO 10297	International Standard
ISO 14246	International Standard

Ordering information

V= valve
D= diaphragm
A1= AISI 316 L body
Seat disc: PCTFE
Diaphragm: AISI 316 L
Hastelloy or Stainless steel
N= Family

Gas Identification

Progressive number: to identify customer personalization, different inlet and outlet threads, bursting disc setting pressure.

Example: VDA2NOS001

DIASPEC TD S200 series

Steel High Pressure Tied Diaphragm Seal Valve

for High Purity Gases

List Features

- Low operating torque guaranteed thanks to the teflon coating upper stem
- Valve seat pad secured against extrusion
- Extreme leak tightness achieved by back-up welded diaphragm sealing
- High Flow Capacity to allow a fast filling and vacuum purging
- Clean room assembly
- 100% helium leak test
- All markings on the valve neck protected against damage
- All inlets and outlets standards available
- Easy purging process allowed by reduced dead spaces and gas wetted volumes
- Lock of threads and springs in the wet area ensures minimum particulate generation
- Gas doesn't contact with the valve operating mechanism

List Technical data

Pressure		
Maximum Service Pressure	230 bar	3,336 PSI
Test	276 bar	4,000 PSI
Temperature - Storage	-40°C ÷ +65°C	-40°F ÷ +149°F
Temperature - Operating	-40°C ÷ +65°C	-40°F ÷ +149°F
Life Cycle	2,000 minimum	
Helium leak rate	Internal	10E-8 atm cc/s
	External	10E-8 atm cc/s
	Safety	10E-8 atm cc/s
Flow coefficient CV	0.4	

Material components

Body Material:	AISI 316 L
Diaphragm:	Hastelloy Stainless Steel
Spindle:	AISI 430F AISI 316 L
Seat Disc:	PCTFE
Bursting disc:	Nickel - AISI 316L AISI 316 L

Options

Different dip tube thread connections available
Customized Handwheel logocap
Various bursting disc settings available
Gas tight outlet cap & chain
Cleaned for UHP/ECD applications
Prepared for flow restrictor attachment (DISS)

Ordering information

V= valve
D= diaphragm
A1= brass body
Seat disc: PCTFE
Diaphragm: Stainless steel
Hastelloy
N= Family

Gas Identification

Progressive number: to identify customer personalization, different inlet and outlet threads, bursting disc setting pressure.

Example: VDA1NOS001

cavagna group

Advanced solutions for gas control

HIGH PRESSURE EQUIPMENT DIVISION

MEDICAL EQUIPMENT

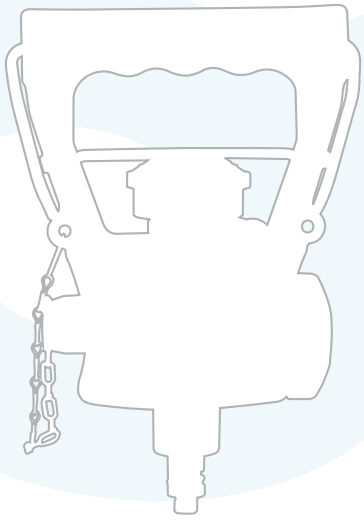

CDA series
Chromium Plated Brass High Pressure Cylinder Valves
for Medical Gases - O-Ring seal type

List Features
- O-Ring technology provides superior leak integrity
- Easy operation under high pressure
- 100% leak test to 1.2 times cylinder service pressure
- All marking on the valve neck, protects against damage
- Large Orifice Ø: provides faster vacuum and filling rates
- Available bursting discs for all DOT cylinders
- Durable forged brass body manufactured by Cavagna Group
- Passes stringent oxygen adiabatic compression test
- Color coded safety device for easy burst disc identification
- Available configurations include:
  Inlet threads (NGT, UNF, DIN477, BS, EN, EN ISO)
- All CGA outlets available
- Unitized "plug style" bursting disc

List Technical data

Pressure		
Maximum Service Pressure	230 bar	3,336 PSI
Test	276 bar	4,000 PSI
Temperature - Storage	-50° C ÷ 65° C	-60° F ÷ 149° F
Temperature - Operating	-45° C ÷ 65° C	-50° F ÷ 149° F
Life Cycle	2,000 minimum	
Max Overtorque	25 N/m	221 lbs / inch
Flow Capacity CV / Full open	n/a	
Orifice Ø:	4 mm	.160"

Material components

Valve Body	Forged Brass according to EN12165 alloy
Bursting disc	Nickel alloy
Bursting disc body	Brass (also available with 212°F fusible metal)
Back up Ring	PTFE
Bonnet	Brass
Handwheel	Aluminium
Seat	Polyamide
O-rings	EPDM
Antifriction	Delrin
Stem	Brass according to EN 12164 alloy

Conforms to all requirements of:

CGA V 9	Standard for Gas Cylinder Valves
CGA S-1.1	Standard for Pressure Relief Devices
CGA V-1	Compressed Gas Cylinder Valve Outlet and Inlet Connections
ISO 10297	International Standard
ISO 14246	International Standard

CDA series
Chromium Plated Brass High Pressure Cylinder Valves

Ordering Information

Part Number	Gas Service	CGA Outlet	Outlet Thread Size	Inlet Thread Size
	Hydrogen			
CDA 8 350 6 xxxx	0 to 3,000 psi	350	.825-14 NGO LH Ext.	1/2"-14 NGT
CDA 1 350 6 xxxx				3/4"-14 NGT
CDA 6 350 6 xxxx				1-11 1/2 NGT
CDA 3 350 6 xxxx				.750"-16 UNF
CDA 9 350 6 xxxx				1.125" -12 UNF
CDA 1 695 6 xxxx	3,000 to 5,500 psi	695	1.045-14 NGO RH Int.	3/4"-14 NGT
CDA 1 703 6 xxxx	5,500 to 7,500 psi	703	1.125-14 NGO LH Int.	3/4"-14 NGT
	Krypton			
CDA 8 580 1 xxxx	0 to 3,000 psi	580	.965-14 NGO RH Int.	1/2"-14 NGT
CDA 1 580 1 xxxx				3/4"-14 NGT
CDA 6 580 1 xxxx				1-11 1/2 NGT
CDA 3 580 1 xxxx				.750"-16 UNF
CDG 9 580 1 xxxx				1.125" -12 UNF
CDA 1 680 1 xxxx	3,000 to 5,500 psi	680	1.045-14 NGO RH Int.	3/4"-14 NGT
CDA 1 677 1 xxxx	5,500 to 7,500 psi	677	1.030-14 NGO LH Ext.	3/4"-14 NGT
	Methane (R50)			
CDA 8 350 6 xxxx	0 to 3,000 psi	350	.825-14 NGO LH Ext.	1/2"-14 NGT
CDA 1 350 6 xxxx				3/4"-14 NGT
CDA 6 350 6 xxxx				1-11 1/2 NGT
CDA 3 350 6 xxxx				.750"-16 UNF
CDA 9 350 6 xxxx				1.125" -12 UNF
CDA 1 695 6 xxxx	3,000 to 5,500 psi	695	1.045-14 NGO RH Int.	3/4"-14 NGT
CDA 1 703 6 xxxx	5,500 to 7,500 psi	703	1.125-14 NGO LH Int.	3/4"-14 NGT
	Natural Gas			
CDA 8 350 6 xxxx	0 to 3,000 psi	350	.825-14 NGO LH Ext.	1/2"-14 NGT
CDA 1 350 6 xxxx				3/4"-14 NGT
CDA 6 350 6 xxxx				1-11 1/2 NGT
CDA 3 350 6 xxxx				.750"-16 UNF
CDA 9 350 6 xxxx				1.125" -12 UNF
CDA 1 695 6 xxxx	3,000 to 5,500 psi	695	1.045-14 NGO RH Int.	3/4"-14 NGT
CDA 1 703 6 xxxx	5,500 to 7,500 psi	703	1.125-14 NGO LH Int.	3/4"-14 NGT
	Neon			
CDA 8 580 1 xxxx	0 to 3,000 psi	580	.965-14 NGO RH Int.	1/2"-14 NGT
CDA 1 580 1 xxxx				3/4"-14 NGT
CDA 6 580 1 xxxx				1-11 1/2 NGT
CDA 3 580 1 xxxx				.750"-16 UNF
CDA 9 580 1 xxxx				1.125" -12 UNF
CDA 1 680 1 xxxx	3,000 to 5,500 psi	680	1.045-14 NGO RH Int.	3/4"-14 NGT
CDA 1 677 1 xxxx	5,500 to 7,500 psi	677	1.030-14 NGO LH Ext.	3/4"-14 NGT
	Nitrogen			
CDA 8 580 1 xxxx	0 to 3,000 psi	580	.965-14 NGO RH Int.	1/2"-14 NGT
CDA 1 580 1 xxxx				3/4"-14 NGT
CDA 6 580 1 xxxx				1-11 1/2 NGT
CDA 3 580 1 xxxx				.750"-16 UNF
CDA 9 580 1 xxxx				1.125" -12 UNF
CDA 1 680 1 xxxx	3,000 to 5,500 psi	680	1.045-14 NGO RH Int.	3/4"-14 NGT
CDA 1 677 1 xxxx	5,500 to 7,500 psi	677	1.030-14 NGO LH Ext.	3/4"-14 NGT
	Air (R729)			
CDA 8 346 1 xxxx	0 psi to 3,000 psi	346	.825"- 14 NGO RH Ext.	1/2"-14 NGT
CDA 1 346 1 xxxx				3/4"-14 NGT
CDA 6 346 1 xxxx				1-11 1/2 NGT
CDA 3 346 1 xxxx				.750"-16 UNF
CDA 9 346 1 xxxx				1.125" -12 UNF
CDA 1 347 1 xxxx	3,000 to 5,500 psi	347	.825-14 NGO RH Ext.	3/4"-14 NGT
CDA 1 702 1 xxxx	5,500 to 7,500 psi	702	1.125"-14 NGO RH Ext.	3/4"-14 NGT
	Argon			
CDA 8 580 1 xxxx	0 to 3,000 psi	580	.965-14 NGO RH Int.	1/2"-14 NGT
CDA 1 580 1 xxxx				3/4"-14 NGT
CDA 6 580 1 xxxx				1-11 1/2 NGT
CDA 3 580 1 xxxx				.750"-16 UNF
CDA 9 580 1 xxxx				1.125" -12 UNF
CDA 1 680 1 xxxx	3,000 to 5,500 psi	680	1.045-14 NGO RH Int.	3/4"-14 NGT
CDA 1 677 1 xxxx	,501 to 7,500 psi	677	1.030-14 NGO LH Ext.	3/4"-14 NGT
	Butane/Propane			
CDA 8 555 1 xxxx	Liquid Withdrawal	555	.903-14 NGO LH Ext.	1/2"-14 NGT
CDA 1 555 1 xxxx				3/4"-14 NGT
CDA 6 555 1 xxxx				1-11 1/2 NGT
CDA 3 555 1 xxxx				.750"-16 UNF
CDA 9 555 1 xxxx				1.125" -12 UNF
CDA 8 320 1 xxxx	**Carbon Dioxide**	320	.825-14 NGO RH Ext.	1/2"-14 NGT
CDA 1 320 1 xxxx	(R744)			3/4"-14 NGT
CDA 6 320 1 xxxx				1-11 1/2 NGT
CDA 3 320 1 xxxx				.750"-16 UNF
CDG 9 320 1 xxxx				1.125" -12 UNF

CDA series
O-ring Industrial Gas Cylinder Valve

Ordering Information

Part Number	Gas Service	CGA Outlet	Outlet Thread Size	Inlet Thread Size
	Carbon Monoxide			
CDA 8 350 6 xxxx	0 to 3,000 psi	350	.825-14 NGO LH Ext.	1/2"-14 NGT
CDA 1 350 6 xxxx				3/4"-14 NGT
CDA 6 350 6 xxxx				1-11 1/2 NGT
CDA 3 350 6 xxxx				.750"-16 UNF
CDA 9 350 6 xxxx				1.125" -12 UNF
CDA 1 695 6 xxxx	3,000 to 5,500 psi	695	1.045-14 NGO LH Int.	3/4"-14 NGT
CDA 1 703 6 xxxx	5,500 to 7,500 psi	703	1.125-14 NGO LH Int.	3/4"-14 NGT
CDA 8 660	**1,2 Dichloroethylene**	660	1.030-14 NGO RH Ext.	1/2"-14 NGT
CDA 1 660	(R1130)		(Face Washer Seal)	3/4"-14 NGT
CDA 6 660				1-11 1/2 NGT
CDA 3 660				.750"-16 UNF
CDA 9 660				1.125" -12 UNF
CDA 8 580 1 xxxx	**Helium**	580	.965-14 NGO RH Int.	1/2"-14 NGT
CDA 1 580 1 xxxx	0 to 3,000 psi			3/4"-14 NGT
CDA 6 580 1 xxxx				1-11 1/2 NGT
CDA 3 580 1 xxxx				.750"-16 UNF
CDG 9 580 1 xxxx				1.125" -12 UNF
CDA 1 680 1 xxxx	3,000 to 5,500 psi	680	1.045-14 NGO RH Int.	3/4"-14 NGT
CDA 1 677 1 xxxx	5,500 to 7,500 psi	677	1.030-14 NGO LH Ext.	3/4"-14 NGT
CDA 8 326 1 xxxx	**Nitrous Oxide**	326	.825-14 NGO RH Ext.	1/2"-14 NGT"
CDA 1 326 1 xxxx	(R744a)			3/4"-14 NGT"
CDA 6 326 1 xxxx				1-11 1/2 NGT
CDA 3 326 1 xxxx				.750"-16 UNF"
CDA 9 326 1 xxxx				1.125" -12 UNF"
	Oxygen			
CDA 8 540 1 xxxx	0 to 3,000 psi	540	.903-14 NGO RH Ext.	1/2"-14 NGT
CDA 1 540 1 xxxx				3/4"-14 NGT
CDA 6 540 1 xxxx				1-11 1/2 NGT
CDA 3 540 1 xxxx				.750"-16 UNF
CDA 9 540 1 xxxx				1.125" -12 UNF
CDA 1 577 1 xxxx	3,000 to 4,000 psi	577	.960-14 NGO RH Ext.	3/4"-14 NGT
CDA 1 701 1 xxxx	4,000 to 5,500 psi	701	1.103-14 NGO RH Ext.	3/4"-14 NGT
CDA 8 660 1 xxxx	**Sulfur Dioxide**	660	1.030-14 NGO RH Int.	1/2"-14 NGT
CDA 1 660 1 xxxx				3/4"-14 NGT
CDA 6 660 1 xxxx				1-11 1/2 NGT
CDA 3 660 1 xxxx				.750"-16 UNF
CDA 9 660 1 xxxx				1.125" -12 UNF
	Xenon			
CDA 8 580 1 xxxx	0 to 3,000 psi	580	.965-14 NGO RH Int.	1/2"-14 NGT
CDA 1 580 1 xxxx				3/4"-14 NGT
CDA 6 580 1 xxxx				1-11 1/2 NGT
CDA 3 580 1 xxxx				.750"-16 UNF
CDA 9 580 1 xxxx				1.125" -12 UNF
CDA 1 680 1 xxxx	3,000 to 5,500 psi	680	1.045-14 NGO RH Int.	3/4"-14 NGT
CDA 1 677 1 xxxx	5,500 to 7,500 psi	677	1.030-14 NGO LH Ext.	3/4"-14 NGT

xxxx Denotes Pressure Relief Device burst disc rupture pressure.

Available with:
"4 and 7 thread oversize inlets: To order change the first number "1" in the part number to "4" or "7"

example: CBA 1 320 1 xxxx becomes CBA 4 320 1 xxxx

Chromium plating: To order, change the letter "B" in the part number to letter "D"
example: CBA 1 540 1 xxxx becomes CDA 1 540 1 xxxx

Fusible backed pressure relief devices in 165 °F and 212 °F nominal melting temperatures:
To order, change the eigth position in the part number to "5" for 165 °F and "6" for 212 °F
example: CBA 1350 1 xxxx becomes CBA 1 350 5 xxxx for 165 °F or CBA 1 350 6 xxxx for 212 °F

P2009 series
Residual Pressure Valve for Medical gases

List Features
- Residual pressure valve, o-ring seal type for various gases including Oxygen.
- Filling connector available separately

List Technical data

Pressure		
Maximum Service Pressure	230 bar	3,336 PSI
Test	276 bar	4,000 PSI
Temperature Range	-40°C ÷ +65°C	-40°F ÷ +149°F
Life Cycle	2,000 minimum	
Guaranteed External Tightness	leakage ≤ 6 cm^3/h	0.788 scfm
Guaranteed Internal Tightness	leakage ≤ 6 cm^3/h	0.788 scfm
Residual pressure device	2.5 to 4 bar	35 to 58 PSI
	(according to customer's specifications)	

Material components

Handwheel	Aluminium
Valve Body	Brass alloy according to EN12165
O-ring	EPDM
Seat pad	Polyamide
Bursting disc	Nickel alloy or Stainless Steel
Spring	Stainless steel or copper beryllium
Seal	Plastic
Bursting disc body	Brass
Spindle	Brass
Spring retainer	Brass

Options
Customized Handwheel logo cap
Dip tube
Bursting disc safety available in various settings
Chromium plating
Plastic Handwheel
Filter
Parallel thread
Thread for dip tube installation

FILLING ADAPTOR

Conforms to all requirements of:

CGA V 9	Standard for Gas Cylinder Valves
CGA S-1.1	Standard for Pressure Relief Devices
CGA V-1	Compressed Gas Cylinder Valve Outlet and Inlet Connections
ISO 10297	International Standard
ISO 14246	International Standard
ISO 15996	International Standard

P1020 series
Residual Pressure Valve for Medical gases

List Features
- Residual pressure valve, o-ring seal type for various gases including Oxygen.
- Filling connector available separately

List Technical data

Pressure		
Maximum Service Pressure	230 bar	3,336 PSI
Test	276 bar	4,000 PSI
Temperature Range	-40°C ÷ +65°C	-40°F ÷ +149°F
Life Cycle	2,000 minimum	
Guaranteed External Tightness	leakage ≤ 6 cm^3/h	0.788 scfm
Guaranteed Internal Tightness	leakage ≤ 6 cm^3/h	0.788 scfm
Residual pressure device	2.5 to 4 bar	35 to 58 PSI
	(according to customer's specifications)	

Material components

Handwheel	Aluminium
Valve Body	Brass alloy according to EN12165
O-ring	EPDM
Seat pad	Polyamide
Bursting disc	Nickel alloy or Stainless Steel
Spring	Stainless steel or copper beryllium
Seal	Plastic
Bursting disc body	Brass
Spindle	Brass
Spring retainer	Brass

Options
Customized Handwheel logo cap
Dip tube
Bursting disc safety available in various settings
Chromium plating
Plastic Handwheel
Filter
Parallel thread
Thread for dip tube installation

FILLING ADAPTOR

Conforms to all requirements of:

CGA V 9	Standard for Gas Cylinder Valves
CGA S-1.1	Standard for Pressure Relief Devices
CGA V-1	Compressed Gas Cylinder Valve Outlet and Inlet Connections
ISO 10297	International Standard
ISO 14246	International Standard
ISO 15996	International Standard

PDE series
Post Medical Cylinder Valves Pin Index System
O-Ring seal type

List Features
- O-Ring technology provides superior leak integrity
- Easy operation under high pressure
- High quality Nickel Chromium plating protects against harmful chemicals
- 100% leak test to full cylinder service pressure
- Body made from extruded brass rod - Fits all CGA specified yokes
- Passes stringent oxygen adiabatic compression test
- Unique stem design meets CGA performance criteria, designed shear point allows stem to break above the spindle nut if over torqued or shocked due to careless handling
- Aluminum cylinder valve supplied with Teflon O-Ring for fast and easy installation
- Oxygen cleaned to meet CGA G4.1 specifications
- Clean room assembly

List Technical data

Pressure		
Maximum Service Pressure	230 bar	3,336 PSI
Test	276 bar	4,000 PSI
Temperature range - Storage	-50° C ÷ 65° C	-60° F ÷ 149° F
Temperature range - Operating	-45° C ÷ 65° C	-50° F ÷ 149° F
Life Cycle	2,000 minimum	

Torque Values for PDE series valve

Wrench operated A		
Operating torque @ 0 PSIG inlet pressure	0.3 N/m	3 lbs/inch
Closing torque @ 3000 PSIG inlet pressure	0.9 - 1.3 N/m	8 - 12 lbs/inc
Toggle B		
Operating torque @ 0 PSIG inlet pressure	0.2 N/m	2 lbs/inch
Closing torque @ 2000 PSIG inlet pressure	0.9 - 1.1 N/m	8 - 10 lbs/inch
Z Valve w/ Handwheel C		
Operating torque @ 0 PSIG inlet pressure	0,2 N/m	2 lbs/inch
Closing torque @ 2000 PSIG inlet pressure	0.9 - 1.1 N/m	8 - 10 lbs/inch

Material components

Valve Body	Chromium plated Brass
Bursting disc	Nickel alloy 201
Handwheel	Aluminium
Seat	Polyamide
O-Rings	EPDM
Anti Friction Ring	PEEK
Stem	Chromium plated Brass
Inlet O-ring	PTFE
Back up ring	Nylon
Toggle	Chromium Plated Brass

Conforms to all requirements of:

CGA V 9	Standard for Gas Cylinder Valves
CGA S-1.1	Standard for Pressure Relief Devices
CGA V-1	Compressed Gas Cylinder Valve Outlet and Inlet Connections
ISO 10297	International Standard
ISO 14246	International Standard

PDE series

Post Medical Cylinder Valves Pin Index System

O-Ring seal type

Ordering Information

Part Number	Gas Service	CGA Outlet	Outlet Thread Size	Inlet Thread Size
PDE 8 950 5 3360 PDE 3 950 5 3360	Air	950	Pins #1 and #5	1/2-14 NGT .750-16 UNF-2A
PDE 8 940 1 3360 PDE 3 940 1 3360	Carbon Dioxide	940	Pins #1 and #6	1/2-14 NGT .750-16 UNF-2A
PDE 8 920 1 3360 PDE 3 920 1 3360	Cyclopropane	920	Pins #3 and #6	1/2-14 NGT .750-16 UNF-2A
PDE 8 900 5 3360 PDE 3 900 5 3360	Ethylene	900	Pins #1 and #3	1/2-14 NGT .750-16 UNF-2A
PDE 8 930 5 3360 PDE 3 930 5 3360	Helium	930	Pins #4 and #6	1/2-14 NGT .750-16 UNF-2A
PDE 8 973 5 3360 PDE 3 973 5 3360	Medical Gas Mixtures	973	Pins #11 and #24	1/2-14 NGT .750-16 UNF-2A
PDE 8 960 5 3360 PDE 3 960 5 3360	Nitrogen	960	Pins # 1 and #4	1/2-14 NGT .750-16 UNF-2A
PDE 8 910 1 3360 PDE 3 910 1 3360	Nitrous Oxide	910	Pins # 3 and #5	1/2-14 NGT .750-16 UNF-2A
PDE 8 965 5 3360 PDE 3 965 5 3360	Nitrous Oxide & Oxygen Mixtures	965	Pin #7	1/2-14 NGT .750-16 UNF-2A
PDE 8 870 5 3360 PDE 3 870 5 3360	Oxygen	870	Pins #2 and #5	1/2-14 NGT .750-16 UNF-2A
PDE 8 880 5 3360 PDE 3 880 5 3360	Oxygen & Carbon Dioxide Mixtures	880	Pins # 2 and #6	1/2-14 NGT .750-16 UNF-2A
PDE 8 890 5 3360 PDE 3 890 5 3360	Oxygen & Helium Mixtures	890	Pins # 2 and #4	1/2-14 NGT .750-16 UNF-2A

All valves are supplied with safety relief devices as specified by the Compressed Gas Association Standard S1.1. Safety relief devices are flush style CG-4 devices backed by 165 F fuse metal, except valves specified for Carbon Dioxide (CGA 940), Cyclopropane (CGA 920) and Nitrous Oxide (CGA 940), where a CG-1 hex style pressure relief device without fuse metal is required.
All valves are supplied with rupture discs rated for cylinders with a service pressure of 2,015 psig. Rupture discs rated for other cylinder service pressures are available upon request.

Optional Features:

Handwheel - example: PDE 8 890 5 3360 changes to PDU 8 890 5 3360
Chromium Plated Toggle- example: PDE 8 890 5 3360 changes to PDF 8 890 5 3360
1/8”-27 NPT gauge port - example: PDE 8 890 5 3360 changes to PDP 8 890 5 3360 (only available with toggle)

PDE R

Post Medical Residual Pressure Valves Pin Index System

O-Ring seal type

List Features

- O-Ring technology provides superior leak integrity
- Easy operation under high pressure
- High quality Nickel Chromium plating protects against harmful chemicals
- 100% leak test to full cylinder service pressure
- Body made from extruded brass rod - Fits all CGA specified yokes
- Passes stringent oxygen adiabatic compression test
- Unique stem design meets CGA performance criteria, designed shear point allows stem to break above the spindle nut if over torqued or shocked due to careless handling
- Aluminum cylinder valve supplied with Teflon O-Ring for fast and easy installation
- Oxygen cleaned to meet CGA G4.1 specifications
- Clean room assembly

List Technical data

Pressure

Test (without b. disc)	518 bar	7,500 PSI
Test with b. disc at 80% of set pressure	276 bar	4,000 PSI
Residual pressure	43.5 to 72.5	3 to 5
Temperature range - Storage	-50° C ÷ 65° C	-60° F ÷ 149° F
Temperature range - Operating	-45° C ÷ 65° C	-50° F ÷ 149° F
Life Cycle	2,000 minimum	

Torque Values for PDE series valve

Wrench operated A		
Operating torque @ 0 PSIG inlet pressure	3 lbs/inch	0.3 N/m
Closing torque @ 3000 PSIG inlet pressure	8 - 12 lbs/inch	0.9 - 1.3 N/m
Toggle B		
Operating torque @ 0 PSIG inlet pressure	2 lbs/inch	0.2 N/m
Closing torque @ 2000 PSIG inlet pressure	8 - 10 lbs/inch	0.9 - 1.1 N/m
PDU C		
Operating torque @ 0 PSIG inlet pressure	2 lbs/inch	0,2 N/m
Closing torque @ 2000 PSIG inlet pressure	8 - 10 lbs/inch	0.9 - 1.1 N/m

Material components

Valve Body	Chromium plated Brass
Bursting disc (If required)	Nickel alloy 201
Handwheel or toggle (if required)	Chromium Plated brass
Seat	Polyamide
O-Rings	EPDM
Back up ring	Teflon®
Anti Friction Ring	PEEK
Stem	Chromium Plated Brass
Inlet O-ring	Teflon®

Conforms to all requirements of:

CGA V 9	Standard for Gas Cylinder Valves
CGA S-1.1	Standard for Pressure Relief Devices
CGA V-1	Compressed Gas Cylinder Valve Outlet and Inlet Connections
ISO 10297	International Standard
ISO 14246	International Standard
ISO 15996	Test on RP Device

PDE R

Post Medical Residual Pressure Valves Pin Index System

O-Ring seal type

Ordering Information

Part Number	Gas Service	CGA Outlet	Outlet Thread Size	Inlet Thread Size
PDE R 8 950 5 3360 PDE R 3 950 5 3360	Air	950	Pins #1 and #5	1/2-14 NGT .750-16 UNF-2A
PDE R 8 940 1 3360 PDE R 3 940 1 3360	Carbon Dioxide	940	Pins #1 and #6	1/2-14 NGT .750-16 UNF-2A
PDE R 8 920 1 3360 PDE R 3 920 1 3360	Cyclopropane	920	Pins #3 and #6	1/2-14 NGT .750-16 UNF-2A
PDE R 8 900 5 3360 PDE R 3 900 5 3360	Ethylene	900	Pins #1 and #3	1/2-14 NGT .750-16 UNF-2A
PDE R 8 930 5 3360 PDE R 3 930 5 3360	Helium	930	Pins #4 and #6	1/2-14 NGT .750-16 UNF-2A
PDE R 8 973 5 3360 PDE R 3 973 5 3360	Medical Gas Mixtures	973	Pins #11 and #24	1/2-14 NGT .750-16 UNF-2A
PDE R 8 960 5 3360 PDE R 3 960 5 3360	Nitrogen	960	Pins #1 and #4	1/2-14 NGT .750-16 UNF-2A
PDE R 8 910 1 3360 PDE R 3 910 1 3360	Nitrous Oxide	910	Pins #3 and #5	1/2-14 NGT .750-16 UNF-2A
PDE R 8 965 5 3360 PDE R 3 965 5 3360	Nitrous Oxide & Oxygen Mixtures	965	Pin #7	1/2-14 NGT .750-16 UNF-2A
PDE R 8 870 5 3360 PDE R 3 870 5 3360	Oxygen	870	Pins #2 and #5	1/2-14 NGT .750-16 UNF-2A
PDE R 8 880 5 3360 PDE R 3 880 5 3360	Oxygen & Carbon Dioxide Mixtures	880	Pins #2 and #6	1/2-14 NGT .750-16 UNF-2A
PDE R 8 890 5 3360 PDE R 3 890 5 3360	Oxygen & Helium Mixtures	890	Pins #2 and #4	1/2-14 NGT .750-16 UNF-2A

All valves are supplied with safety relief devices as specified by the Compressed Gas Association Standard S1.1. Safety relief devices are flush style CG-4 devices backed by 165 °F fuse metal, except valves specified for Carbon Dioxide (CGA 940) and Nitrous Oxide (CGA 940), where a CG-1 hex style pressure relief device without fuse metal is required.
All valves are supplied with rupture discs rated for cylinders with a service pressure of 2,015 psig.
Rupture discs rated for other cylinder service pressures are available upon request.

Optional Features:

Handwheel - example: PDE R 8 890 5 3360 changes to PDU 8 890 5 3360
Chromium Plated Toggle- example: PDE R 8 890 5 3360 changes to PDF 8 890 5 3360
1/8”-27 NPT gauge port - example: PDE R 8 890 5 3360 changes to PDP 8 890 5 3360 (only available with toggle)

cavagna group

VIPROXY series

Valve with Integrated Pressure Reducer for medical Oxygen

- 3336 PSI -

List Features

- Valve with integrated pressure reducer for Medical Oxygen
- MRI compatible
- Positive pressure device incorporated
- Non return valve with synterized bronze filter integrated in the filling port
- Compensated regulator
- Synterized bronze filter in the cylinder connection
- Tested and approved in accordance with the International Standards EN-ISO 10524-3
- CE and π marked according to the European Directives for Medical and trasportable pressure devices
- Active gauge with fluorescent scales

List Technical data

Pressure		
Maximum Service Pressure	230 bar	3,336 PSI
Outlet Pressure	4 bar	58 PSI
Test	276 bar	4,000 PSI
Residual Positive Pressure	3 - 5 bar	43 - 72 psi
Temperature Range	-40°C ÷ +65°C	-40°F ÷ +149°F
Life Cycle	5,000 minimum	
Flow Rate	2,400 Nl/m	
Hose-barb Ø	6 mm	

VIPROXY®

Material components

Body in forged brass
Valve Main Sealing in Nylon
Regulator Sealing in Nylon
Elastomer in EPDM
The valve is not made of any ferrous material and steel

Options

5 different flow scales with the following characteristics:

Application	l/min											
Baby care	0	¼	½	¾	1	1½	2	2½	3	4	5	6
Home care	0	½	1	2	3	4	5	6	8	10	12	15
Home care	0	¼	½	1	2	3	4	6	8	10	12	15
Intensive therapy	0	1	2	3	4	5	6	8	10	12	15	25
Intensive therapy	0	¼	½	1	2	3	4	6	8	10	15	25

Quick hospital connection, with 4 bar (58 psi) outlet pressure, in accordance with the main International Standards (DIN, BS, DISS, AFNOR, UNI)
Excess Flow valve with synterized bronze filter in the valve's inlet
Plastic protection handle complying with ISO 11117, available in green or white color
Hospital bed handle available
Bursting disc
Antifilling device and non return valve in the filling port

Mantainance

Please refer only to the "User Maintenance Instruction" that is provided with this product.
It is recommended to replace the valve when the cylinder is being retested.

VIPROXY series

Valve with Integrated Pressure Reducer for medical Oxygen

- 4350 PSI -

List Features

- Valve with integrated pressure reducer for Medical Oxygen
- MRI compatible
- Positive pressure device incorporated
- Non return valve with synterized bronze filter integrated in the filling port
- Compensated regulator
- Synterized bronze filter in the cylinder connection
- Tested and approved in accordance with the International Standards EN-ISO 10524-3
- CE and π marked according to the European Directives for Medical and trasportable pressure devices
- Active gauge with fluorescent scales

List Technical data

Pressure		
Maximum Service Pressure	300 bar	4,350 PSI
Outlet Pressure	4 bar	58 PSI
Test	360 bar	5,220 PSI
Residual Positive Pressure	3 - 5 bar	43 - 72 psi
Temperature Range	-40°C ÷ +65°C	-40°F ÷ +149°F
Life Cycle	5,000 minimum	
Flow Rate	2,400 Nl/m	
Hose-barb Ø	6 mm	

VIPROXY®

Material components

Body in forged brass
Valve Main Sealing in Nylon
Regulator Sealing in Nylon
Elastomer in EPDM
The valve is not made of any ferrous material and steel

Options

5 different flow scales with the following characteristics:

Application	l/min											
Baby care	0	¼	½	¾	1	1½	2	2½	3	4	5	6
Home care	0	½	1	2	3	4	5	6	8	10	12	15
Home care	0	¼	½	1	2	3	4	6	8	10	12	15
Intensive therapy	0	1	2	3	4	5	6	8	10	12	15	25
Intensive therapy	0	¼	½	1	2	3	4	6	8	10	15	25

Quick hospital connection, with 4 bar (58 psi) outlet pressure, in accordance with the main International Standards (DIN, BS, DISS, AFNOR, UNI)
Excess Flow valve with synterized bronze filter in the valve's inlet
Plastic protection handle complying with ISO 11117, available in green or white color
Hospital bed handle available
Bursting disc
Antifilling device and non return valve in the filling port

Mantainance

Please refer only to the "User Maintenance Instruction" that is provided with this product.
It is recommended to replace the valve when the cylinder is being retested.

cavagna group

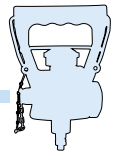

VIPROXY 1 Touch series

Valve with Integrated Pressure Reducer for medical Oxygen

- 3336 PSI -

List Features

- 1 Touch incorporates a low torque non rotating spindle shut off valve with an integrated ten position flow setting device
- Valve with integrated pressure reducer for Medical Oxygen
- MRI compatible
- Non return valve with synterized bronze filter integrated in the filling port
- Compensated regulator
- Synterized bronze smart filter in the cylinder connection
- Tested and approved in accordance with the International Standards EN-ISO 10524-3, CGA E-18
- CE and π marked according to the European Directives for Medical and trasportable pressure devices
- Positive pressure device incorporated
- Active gauge with fluorescent screen

List Technical data

Pressure		
Maximum Service Pressure	230 bar	3,336 PSI
Outlet Pressure	4 bar	58 PSI
Test	276 bar	4,000 PSI
Residual Positive Pressure	3 - 5 bar	43 - 72 psi
Temperature Range	-40°C ÷ +65°C	-40°F ÷ +149°F
Life Cycle	5,000 minimum	
Flow Rate	2,400 Nl/m	
Hose-barb Ø	6 mm	

VIPROXY® 1 touch

Material components

Body in forged brass
Valve Main Sealing in Nylon
Regulator Sealing in Nylon
Elastomer in EPDM
The valve is not made of any ferrous material and steel

Options

5 different flow scales with the following characteristics:

Application	l/min											
Baby care	0	¼	½	¾	1	1½	2	2½	3	4	5	6
Home care	0	½	1	2	3	4	5	6	8	10	12	15
Home care	0	¼	½	1	2	3	4	6	8	10	12	15
Intensive therapy	0	1	2	3	4	5	6	8	10	12	15	25
Intensive therapy	0	¼	½	1	2	3	4	6	8	10	15	25

Quick hospital connection, with 4 bar (58 psi) outlet pressure, in accordance with the main International Standards (DIN, BS, DISS, AFNOR, UNI)
Excess Flow valve with synterized bronze smart filter in the valve's inlet
Plastic protection handle complying with ISO 11117, available in green or white color
Hospital bed hook available
Bursting disc
Antifilling device and non return valve in the filling port

Mantainance

Please refer only to the "User Maintenance Instruction" that is provided with this product.
It is recommended to replace the valve after 10 years starting from the printed date on the valve body.

VIPROXY 1 Touch series

Valve with Integrated Pressure Reducer for medical Oxygen

- 4350 PSI -

List Features

- 1 Touch incorporates a low torque non rotating spindle shut off valve with an integrated ten position flow setting device
- Valve with integrated pressure reducer for Medical Oxygen
- MRI compatible
- Non return valve with synterized bronze filter integrated in the filling port
- Compensated regulator
- Synterized bronze smart filter in the cylinder connection
- Tested and approved in accordance with the International Standards EN-ISO 10524-3, CGA E-18
- CE and π marked according to the European Directives for Medical and trasportable pressure devices
- Positive pressure device incorporated
- Active gauge with fluorescent screen

List Technical data

Pressure		
Maximum Service Pressure	300 bar	4,350 PSI
Outlet Pressure	4 bar	58 PSI
Test	360 bar	5,220 PSI
Residual Positive Pressure	3 - 5 bar	43 - 72 psi
Temperature Range	-40°C ÷ +65°C	-40°F ÷ +149°F
Life Cycle	5,000 minimum	
Flow Rate	2,400 Nl/m	
Hose-barb Ø	6 mm	

VIPROXY® 1touch

Material components

Brass Forged Body
Valve Main Sealing in Nylon
Regulator Sealing in Nylon
Elastomer in EPDM
The valve is not made of any ferrous material or steel

Options

5 different flow scales with the following characteristics:

Application	l/min											
Baby care	0	¼	½	¾	1	1½	2	2½	3	4	5	6
Home care	0	½	1	2	3	4	5	6	8	10	12	15
Home care	0	¼	½	1	2	3	4	6	8	10	12	15
Intensive therapy	0	1	2	3	4	5	6	8	10	12	15	25
Intensive therapy	0	¼	½	1	2	3	4	6	8	10	15	25

Quick hospital connection, with 4 bar (58 psi) outlet pressure, in accordance with the main International Standards (DIN, BS, DISS, AFNOR, UNI)
Excess Flow valve with synterized bronze smart filter in the valve's inlet
Plastic protection handle complying with ISO 11117, available in green or white color
Hospital bed hook available
Bursting disc
Antifilling device and non return valve in the filling port

Mantainance

Please strictly rely on the "User maintenance instruction"
It is recommended to replace the valve after 10 years starting from the printed date on the valve body.

cavagna group

Advanced solutions for gas control

HIGH PRESSURE EQUIPMENT DIVISION

SCUBA VALVES

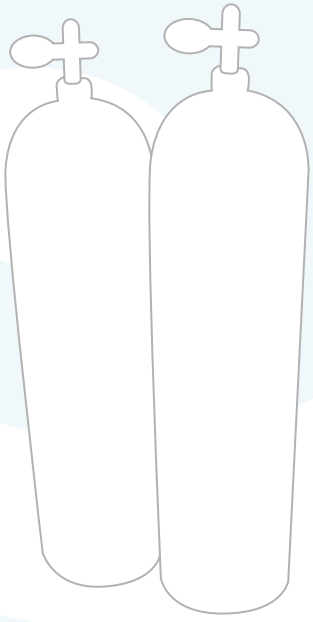

NAUTILUS series

Single outlet with/without bursting disc
Second outlet

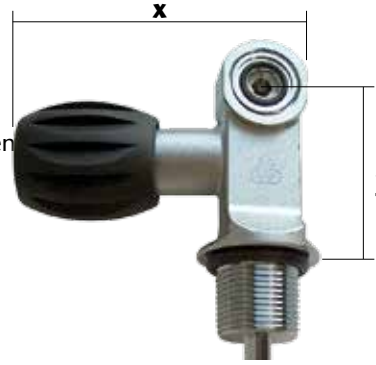

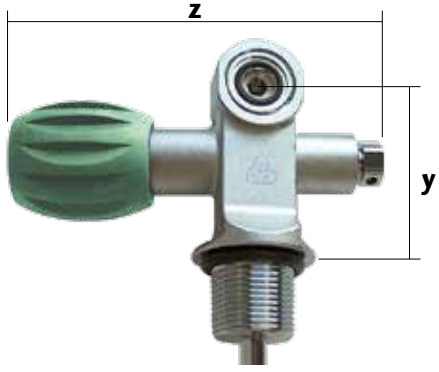

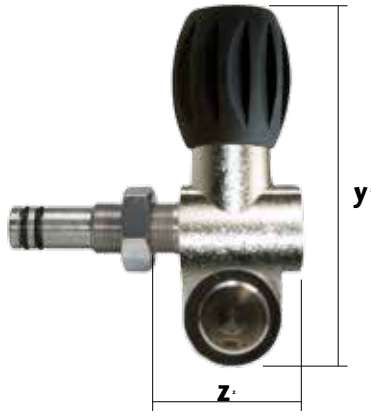

List Features

- Valves CE marked in accordance with the European Directive 97/23 EC (PED)
- Complying with the requirements of the EN 250 standard
- High quality Chromium Plated body with excellent resistance to salt spray test
- Safe and long life under all service conditions is guaranteed by the solid design and the quality of the Material components of the internal componen
- Large internal orifice ensures a high gas flow capacity
- Handwheel closing torque: 0,9 Nm @ 230 Bar
- Ergonomic Handwheel designed to be manipulated with thick protective gloves
- Permanent gas tight seal
- OPEN and CLOSE stamped on the Handwheel
- Dip tube installed in the valve inlet to ensure a better breathing
- Inlet thread M25x2 EN144-1 or G ¾ NPSM
- Outlet thread for 230 bar W.P. G 5/8 ISO12209-2 with removable yoke connection according to ISO 12209-3 CGA 850
- Outlet thread for 300 bar W.P. G 5/8 ISO12209-2
- Nautilus Series is also compatible with EAN, NITROX and TRIMIX
- Different pressure settings for bursting disc are available
- Individually packaged and cleaned for oxygen service

List Technical data

Pressure		
Maximum Service Pressure	230 or 300 bar	3,336 or 4,350 PSI
Test	270 or 360 bar	3,350 or 5,220 PSI
Temperature Range	-20°C ÷ +65°C	-4°F ÷ +149°F
Life Cycle	2,000 minimum	
Helium Leak Rate	less than 10-3 mbar l/s	

Material components

Body	Chromium Plated brass
O-ring	EPDM
Backup ring	PTFE
Seat pad	PA 6.6
Handwheel	Black or Green Rubber with plastic insert

Dimensions

	mm	inches
x	93	3.66
y	55	2.16
z	121.7	4.79
y^2	90	3.54
z^2	35	1.37

Ordering Information

VS=	Scuba Valve
A1=	230 bar Working Pressure
B1=	300 bar Working Pressure
D=	Family
LH=	Left Hand
RH=	Right Hand
CE=	Manifold with shut off
XXX=	Progressive numbers to identify the different inlets, bursting disc setting pressure and personalizations

EXAMPLE: VSA1DLH001

NAUTILUS series

Manifold with Isolator

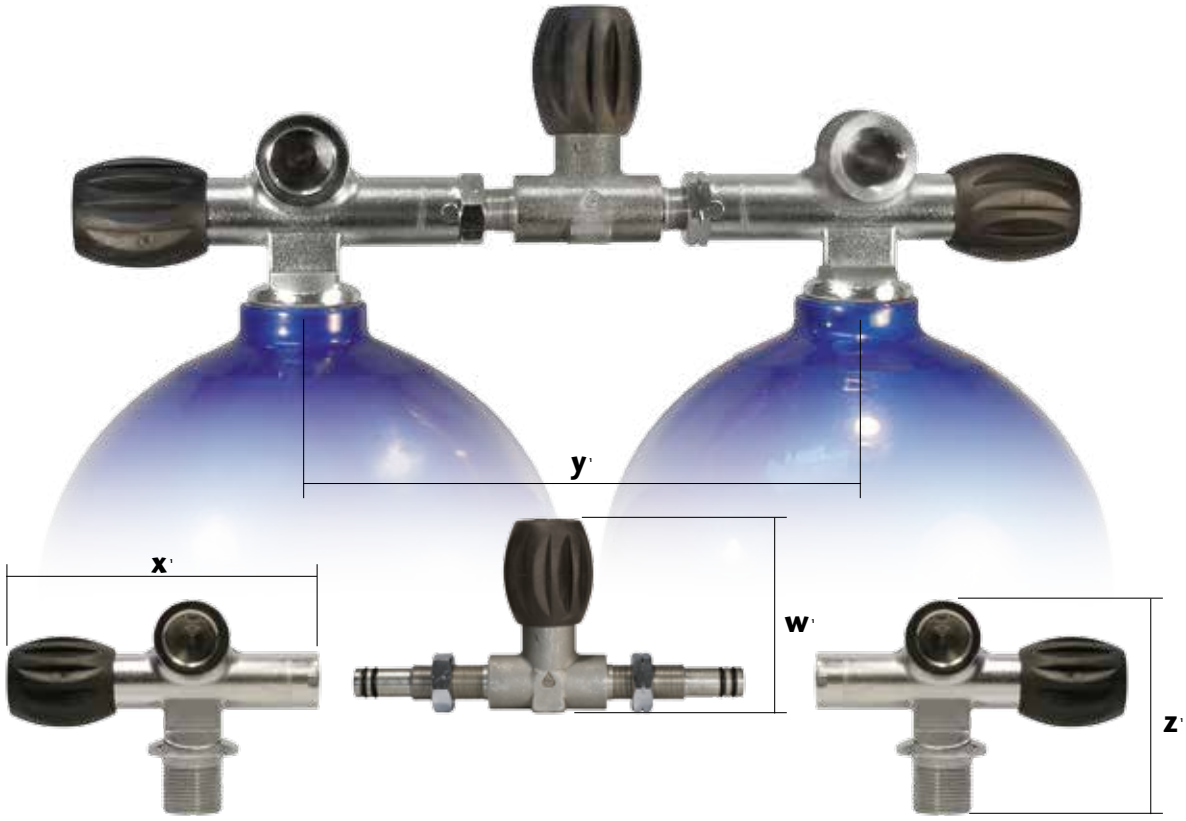

Material components

Body	Chromium Plated brass
O-ring	EPDM
Backup ring	PTFE
Seat pad	PA 6.6
Handwheel	Black or Green Rubber with plastic insert

Dimensions

	mm	Inches
x'	130	5.11
y'	168/178	6.61/7
	178/188	7/7.40
	188/198	7.40/7.79
	210/220	8.26/8.66
w'	81	3.18
z'	90	3.54

Ordering Information

VS=	Scuba Valve
A1=	3336 PSI Working Pressure
B1=	300 bar Working Pressure
D=	Family
LH=	Left Hand
RH=	Right Hand
CE=	Manifold with shut off
XXX=	Progressive numbers to identify the different inlets, bursting disc setting pressure and personalizations

EXAMPLE: VSA1DLH001

ASSEMBLY SOLUTIONS

Single CYLINDER Single OUTLET

Single CYLINDER Twin OUTLET

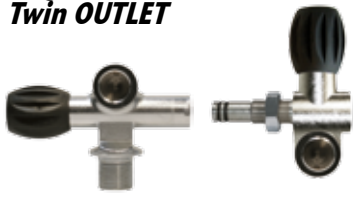

Twin CYLINDER Twin OUTLET

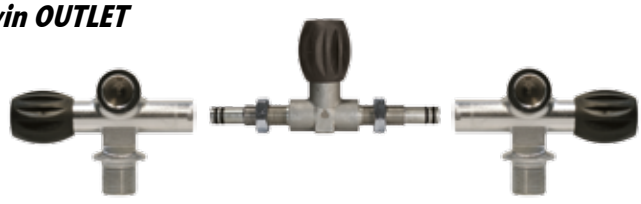

cavagna group

Advanced solutions for gas control

cavagna group

Advanced solutions for gas control

HIGH PRESSURE EQUIPMENT DIVISION

REFRIGERANT GASES VALVES

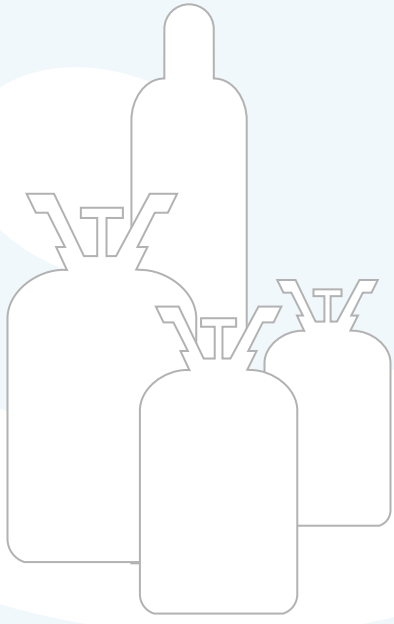

RUS series
Single Outlet Compact Refrigerant Recovery Valves
O-Ring Cylinder Valves for Refrigerant Gases Liquid/Vapor

List Features
- Tamper proof gland nut cannot be removed
- Non-refillable outlet feature, protects cylinder from contamination (Removable and fixed versions available)
- Hose barb supplied for easy assembling of the Dip Tube
- CGA-7 pressure relief devices - various settings available
- Various soft seat Material components assures positive leak tight shut-off

- Inlet threads available with ever seal insuring leak tight cylinder connection and reduced friction during installation
- UL Listed

List Technical data

Maximum Service Pressure	45 bar	650 PSI
Temperature Range	-40°C ÷ +65°C	-40°F ÷ +149°F
Life Cycle	6,000 minimum	
Flow rate (CV):	n/a	
Discharge flow capacity for PRD start to discharge =525 PSI	208 CFM Air @ 700 PSI	

Material components

Valve Body	Brass EN 12165 alloy
Spring	Stainless Steel
Handwheel	Plastic
Seat	Various PA
O-Rings	Various CR

Options
Various Dt lengths and Material components
Inverted Handwheels for liquid and vapour
PRD seal cap
Pressure relief device cartridge style
Everseal preapplied on the inlet

Conforms to all requirements of:

CGA V 9	Standard for Gas Cylinder Valves
CGA S-1.1	Standard for Pressure Relief Devices
CGA V-1	Compressed Gas Cylinder Valve Outlet and Inlet Connections

Various inlet and outlet configurations available

RDU series
Diaphragm Packless Multivalves
for Refrigerant Gases

List Features

- Diaphragm packless style valves
- Non-refillable outlet feature, protects cylinder from contamination (Removable and fixed versions available)
- Single or dual outlet available
- All valves are 100% leak test to full cylinder service pressure
- Hose barb supplied for easy assembling of the Dip Tube
- CGA-7 pressure relief devices - various settings available
- Various soft seat Material components assures positive leak tight shut-off

- Inlet threads available with ever seal insuring leak tight cylinder connection and reduced friction during installation
- UL listed

List Technical data

Maximum Service Pressure	55 bar	800 PSI
Temperature Range	-40°C ÷ +65°C	-40°F ÷ +149°F
Life Cycle	6,000 minimum	
Flow rate (CV):	n/a	
Discharge flow capacity for PRD start to discharge =600 PSI	240 CFM Air @ 800 PSI	

Material components

Valve Body	Brass EN 12165 alloy
Handwheel	Plastic
Diaphragm	Stainless steel
Spring	Stainless steel

Options

Various Dt lengths and Material components
Inverted Handwheels for liquid and vapour
PRD seal cap
Pressure relief device cartridge style
Stainless steel body for special applications
Everseal preapplied on the inlet
Antifilling devices available on some models

Conforms to all requirements of:

CGA V 9	Standard for Gas Cylinder Valves
CGA S-1.1	Standard for Pressure Relief Devices
CGA V-1	Compressed Gas Cylinder Valve Outlet and Inlet Connections
ISO 10297	International Standard

Various inlet and outlet configurations available

RBV series
Single Outlet Diaphragm Packless Valves
for Refrigerant Gases

List Features
- Diaphragm packless style valves
- Non-refillable outlet feature, protects cylinder from contamination (Removable and fixed versions available)
- CGA-7 pressure relief devices - various settings available
- Various soft seat Material components assures positive leak tight shut-off
- Inlet threads available with ever seal insuring leak tight cylinder connection and reduced friction during installation

List Technical data

Maximum Service Pressure	55 bar	800 PSI
Temperature Range	-40°C ÷ +65°C	-40°F ÷ +149°F
Life Cycle	6,000 minimum	
Flow rate (CV):	n/a	
Discharge flow capacity for PRD start to discharge =6oo PSI	240 CFM Air @ 800 PSI	

Material components

Valve Body	Brass EN 12165 alloy
Handwheel	Plastic
Diaphragm	Stainless steel
Spring	Stainless steel

Options
Colored Handwheel
PRD seal cap
Everseal preapplied on the inlet

Conforms to all requirements of:
ISO 10297 International Standard

Various inlet and outlet configurations available

ROB series
Refrigerant Cylinder Valves
O-Ring seal type

List Features

- These valves are double o-ring seal type valves
- Double o-ring Material components technology reduces the possibility of leaks
- Robust brass handwheel united with the original Qualihandwheel® Cavagna system. Brass handwheels are a more resistant than common aluminium or zamak handwheel
- O-ring Material components compatible with all different type of Refrigerant gases
- All inlets and outlets standard available
- Different handwheel sizes available

List Technical data

Maximum Service Pressure	55 bar	800 PSI
Temperature Range	-40°C ÷ +65°C	-40°F ÷ +149°F
Life Cycle	10,000 minimum	
Flow rate (CV):	n/a	
Discharge flow capacity for PRD start to discharge =600 PSI	240 CFM Air @ 800 PSI	

Material components

Valve Body	Brass EN 12165 alloy
Spindle	Brass EN 12164 alloy
Handwheel	Brass EN 12165 alloy
O-rings	Various CR
PRD Spring	Stainless steel
Seat Pad	Various PA

Options

Customized handwheel logo
Dip tube thread
Dip tube material based on customer requirements
Pressure relief devices various sett pressure
Antifilling devices available on some models
Everseal preapplied on the inlets

Conforms to all requirements of:

EN 15995	International Standard
ISO 10297	International Standard

Various inlet and outlet configurations available

ROY series
Double Outlet Compact Refrigerant Recovery Valves
O-Ring Cylinder Valves for Refrigerant Gases Liquid/Vapor

List Features
- Tamper proof gland nut cannot be removed
- Hose barb supplied for easy assembling of the Dip Tube
- CGA-7 pressure relief devices - various settings available
- Various soft seat Material components assures positive leak tight shut-off

- Inlet threads available with ever seal insuring leak tight cylinder connection and reduced friction during installation
- UL Listed

List Technical data

Maximum Service Pressure	45 bar	650 PSI
Temperature Range	-40°C ÷ +65°C	-40°F ÷ +149°F
Life Cycle	6,000 minimum	
Flow rate (CV):	n/a	
Discharge flow capacity for PRD start to discharge =525 PSI	208 CFM Air @ 700 PSI	

Material components

Valve Body	Brass EN 12165 alloy
Spring	Stainless Steel
Handwheel	Plastic
Seat	Various PA
O-Rings	Various CR

Options
Various Dt lengths and Material components
Inverted Handwheels for liquid and vapour
PRD seal cap
Pressure relief device cartridge style

Conforms to all requirements of:

CGA V 9	Standard for Gas Cylinder Valves
CGA S-1.1	Standard for Pressure Relief Devices
CGA V-1	Compressed Gas Cylinder Valve Outlet and Inlet Connections

Various inlet and outlet configurations available

* Valve Handwheels are reversed - Red is vapor withdrawal and Blue is liquid withdrawal. Various dip tube material and lengths are available on request - Please consult the manufacturer for details.

RIV series
High Flow Rate Refrigerant gases valves
O-Ring seal type

List Features
- High Flow Rate refrigerant gases valve
- Easy handwheel operation under pressure
- Pressure relief devices - various settings available
- Double o-ring seal type valve
- Non-refillable outlet feature, protects cylinder from contamination (Removable and fixed versions available)

List Technical data

Maximum Service Pressure	45 bar	650 PSI
Temperature Range	-40°C ÷ +65°C	-40°F ÷ +149°F
Life Cycle	2,000 minimum	
Flow rate (CV):	n/a	
Discharge flow capacity for PRD start to discharge =500 PSI	262 CFM Air @ 660 PSI	

Material components

Valve Body	Brass EN 12165 alloy
Handwheel	Aluminum
O-ring	Various CR
Spindle	Brass
Antifilling device	Plastic / Brass / Stainless Steel
PRD Spring	Stainless steel

Options
Available with antifilling device
Everseal preapplied on the inlet
Dip tube various Material components
Colored Handwheel
Customized Handwheel logo cap

Conforms to all requirements of:
ISO 10297 International Standard

Various inlet and outlet configurations available

cavagna group

Advanced solutions for gas control

cavagna group

Advanced solutions for gas control

HIGH PRESSURE EQUIPMENT DIVISION

TABLE OF OUTLET CONNECTIONS FOR THE MOST SIGNIFICANT GASES

Table of outlet connections for the most significant gases

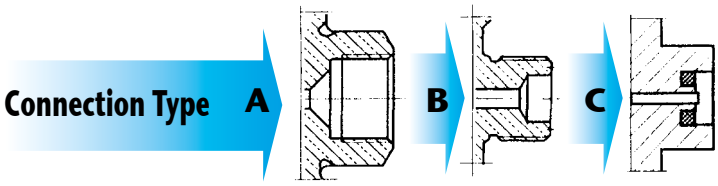

GAS	Chemical Symbol	Dimensions	Standard	Type
COMPRESSED AIR		.825″ - 14 NGO TH EXT	CGA 346	B
NITROGEN	N_2	.965″ - 14 NGO RH INT	CGA 580	A
ARGON	Ar	.965″ - 14 NGO RH INT	CGA 580	A
HELIUM	He	.965″ - 14 NGO RH INT	CGA 580	A
HYDROGEN	H_2	.825″ - 14 NGO LH EXT	CGA 350	B
METHANE	CH_4	.825″ - 14 NGO LH EXT	CGA 350	B
CARBON MONOXIDE	CO	.825″ - 14 NGO LH EXT	CGA 350	B
OXYGEN	O_2	.903″ - 14 NGO RH EXT	CGA 540	B
CARBON DIOXIDE	CO_2	.825″ - 14 NGO LH EXT	CGA 320	B
NITROUS OXIDE	N_2O	.825″ - 14 NGO LH EXT	CGA 326	B
ACETYLENE	C_2H_2	.885″ - 14 NGO LH INT	CGA 510	A
AMMONIA	NH_3	3/8″ - 18 NGT RH INT	CGA 240	A
SULPHUR DIOXIDE	SO_2	1.030″ - 14 NGO RH EXT	CGA 660	B
PROPANE	C_3H_8	.885″ - 14 NGO LH INT	CGA 510	A
BUTANE	C_4H_{10}	.885″ - 14 NGO LH INT	CGA 510	A
CHLORINE	Cl_2	1.030″ - 14 NGO RH EXT	CGA 660	B
ETHYLENE OXIDE	C_2H_4O	.885″ - 14 NGO LH INT	CGA 510	A
PHOSGENE	$COCl_2$	1/8″ - 27 NGT RH INT	CGA 160	A
REFRIGERANT		1.030″ - 14 NGO RH EXT	CGA 660	B

cavagna group

Advanced solutions for gas control

HIGH PRESSURE EQUIPMENT DIVISION

2 YEARS LIMITED WARRANTY

1 - Compliance of the products
Subject to the provisions of this article, the seller guarantees the compliance of the products supplied; by the term "compliance of the products" is meant that they correspond in quantity, quality, and type with what was agreed in the contract and that they are without defects that could render them unfit for the use to which they are intended to be put.

2 - Extent of the guarantee
The guarantee against defects is limited only to product defects due to defects in planning, Material components or construction that can be attributed to the seller, and does not apply in the case where the buyer is unable to prove a correct preservation of the products, and neither that he has modified them without the agreement of the seller.
Furthermore, the seller is not liable for defects in product compliance due to the normal wear of those parts, which by their nature, are subject to rapid and continuous wear and tear (for example: lining, etc.).
In general, in no case is the seller liable for defects in compliance, whose cause lies in a fact subsequent to the transfer of risk to the buyer.
The present guarantee is valid only when the products are installed, used and maintained in conformity with the instructions furnished by the seller (inserted in the Warning Paper) and with the requests and dispositions of the voluntary or mandatory laws and regulations existing in the country where the products are used or, where there's no laws, in conformity with the good technical work rules of the sector.

3 - Claims
The buyer is required to control the compliance of the products and the absence of flaws. The buyer should report any flaws or defects in product compliance, in the following ways:
a) Claims for shortage or damages apparent from exterior examination of package contents must be expedited as soon as the products arrived at their place of destination or risk forfeiture;
b) claims relevant to quantity, colour, quality flaws or defects or non-compliance that the buyer would be able to point out as soon as he takes possession of the goods, must be made shortly after the time when the products arrived at their place of destination and, in any event, on lapse of the guarantee not later than 15 days after that time;
c) hidder flaws, defects or non-compliance (that is, those not identifiable according to the inspection imposed by law and by the preceding subparagraph on the buyer) must be reported shortly after the discovery and in any event, on lapse of the guarantee, not later than 2 years from the delivery date.
Claims must be made by registered letter, addressed to the head office of the seller and must describe in detail the flaws or disputed non-compliance.
In order to preserve this warranty, the buyer will not execute any intervention on the product (disassembling, repair, modification, etc.) without the seller prior written agreement.
The buyer forfeits his guarantee rights if he does not consent to every reasonable control requested by the seller, or if after the seller has requested the return of the defective products at his own expenses, the buyer omits to return them within 5 working days from the request.
In the event that the claim turns out to be unfounded, the buyer will be required to reimburse the seller for all the expenses sustained by him in verifying the claim (travel, expert valuations, transport expenses etc..).

4 - Remedies
Following a report by the buyer duly made in accordance with the previous point 3, the seller, within a reasonable period having regard to the context of the claim, may, at his discretion:
a) supply ex factory to the buyer products of the same kind and quantity as those that have been proved to be defective or not in compliance with what was agreed; in such a case the seller can require the return or the defective products, which become his property.
b) declare in writing the cancellation of the contract, offering the restitution of the sum paid against the restitution of the supplied products.
No other cost (such as disassembling and/or reassembling of the products, transportation from/to the premises of buyer's customers, etc.) shall be charged to the seller.

5 - Limit of seller's liability
The guarantee contained in the previous points supersedes all legal warranty for defects and compliance, and excludes any other possible liability of the seller, however originating, from the products supplied. In particular, the buyer can not put forward another claim for compensation in respect of any further damages, reduction of the price or cancellation of the contract. Once the period of the guarantee has expired no valid claim can be made against the seller.
In no event shall seller be liable to buyer for any direct, incidental, indirect, consequential or exemplary damages, including without limitation any claim for damages based on lost revenues or profits, however caused.
No exceptions to the provisions of the present point and to the previous ones will be considered valid unless expressly and specifically defined and accepted by the parties in writing.

6 - Technical regulations
Whereas for that which concerns the product characteristics the seller complies with the legislation and the technical regulations prevailing in Italy and the European Directives, and that will be furnished on request, the buyer assumes the whole risk of any difference between the European Directives plus the Italian regulations and those of the country of destination of the products, and indemnifies the seller in respect of it, unless if they have been previously communicated to him.
The seller guarantees the performance of products of his manufacture only and exclusively in relation to uses, destinations, applications, tolerances, capacities, etc.. that have been expressly indicated by him, with the sole exception of uses, destinations and applications that, to the common knowledge acquired by normal users, are clearly and unequivocally attributable to the products in question.
The buyer is not authorised to dispose of the products supplied to him by the seller in a way which does not conform to the indications described in the previous sub-paragraph and in the instruction given by seller.
Where the buyer intends the said products to be resold, it shall be his responsibility:
a) informing his purchasers of the indications in question;
b) any further periods of guarantee he decides to grant to his purchasers exceeding the ones granted to him by Seller according to paragraph 3

7 - Personal injuries and property damages
Seller shall indemnify buyer from and against any and all claims, demands, losses, liabilities alleged by third parties relating to personal injuries and property damages suffered as a result of a defective product. In such event, seller will exclusively be responsible within the limits, terms and conditions of the product liability insurance policy held by it (a copy of the current policy is available upon request).
In case of potential damages to third parties that may arise from a defective product, the parties shall work together in good faith to determine the nature and extent of the appropriate measures to be taken, including recall operations. It is understood that the costs and expenses associated with the recall or other measures shall be paid by seller within the limits, the terms and the conditions set forth in its liability insurance policy, with the exclusion of the costs connected to the finding of the Products in the market, that will be supported by the Buyer.

Cavagna Group's HP stocking locations

Cavagna North America, Inc
50 Napoleon Court
Somerset, NJ 08873
Phone: 001-732-4692100
Fax: 001-732-4693344
Email: info@cavagna.com

Western Regional Office:
Cavagna North America, Inc
1393 Dodson Way-A
Riverside, CA 92507
Phone: 732-469-2100 ext. 200
Fax: 732-469-3344
Email: info@cavagna.com

Canada:
Diversco Supply
495 Conestoga Blvd
Cambridge
Ontario Canada N1R 7P4
Phone: 519-740-1210
Fax: 519-740-7303
Toll Free: 1-800-661-9955
Email: info@diverscosupply.com

cavagna north america inc.

50 Napoleon Court Somerset, NJ 08873
732-469-2100 • Fax 732-469-3344

info@cavagna.com - www.cavagnagroup.com

5CA1442 - Rev. 3 Eng. - 10/14